MAHINDRA
TRACTORS

PARTS CATALOGUE
'10' Series
4510C Model

Click here to go on

INDEX

Main Menu

Cultivate Your Dreams℠

Mahindra Tractors

contactus@almats.com

The Mahindra Group ▪ Mahindra USA, Inc. ▪ 17723 FM 2920 ▪ Tomball, Texas 77377 ▪ 1-800-887-2286 ▪ www.mahindrausa.com

Important tips of Parts Catalogue

We thank you for your purchasing our product, manufactured under strict quality control, by gathering plenty of experiences and new technology, designed for a comport and pleasant work.

1. Part Composition

This catalogue deals with engine and chassis.

Detailed classifications are listed in the following page.

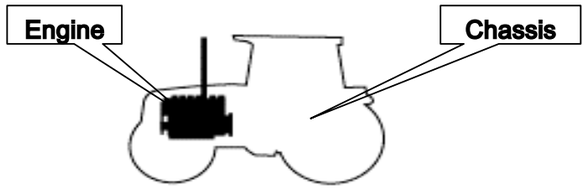

2.For locating parts easily,Please Note:

A.If you know the assembly where the part is used.

-Refer to the relevant figure from the identifying group symbol illustration,

-Locate the relevant chapter

-Refer to the particular chapter desired.

3. For ordering parts

To obtain spare parts please contact your nearest dealer and give him the details listed below.

①Tractor Model : Tractor

②Tractor Serial Number : W050000

③Part Number : 16001032000

④Description : Air cleaner assembly

⑤Quantity required: 1

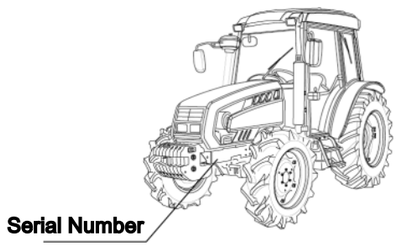

4. For ordering PARTS CATALOGUE

This is Priced item and one is to order the same on part No. 1451 950 001 0

This supersedes all our editions.

Note)When replacing parts, please use original spare parts to be sure of the performance and the longer life of the product

※The information in this catalogue may at any time be modified without a prior notice for the improvement of performance, please consult our spare parts dept. for the detailed inquiry.

5. How to use parts catalogue

FIG 023 ②	RADIATOR ③	P1 ④	Month/Year ⑤ 08 / 03	①

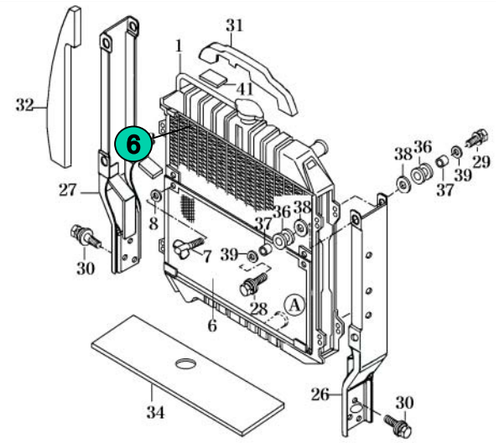

NOTE	⑬

FIG 023 ②	RADIATOR ③	P1 ④	Month / Year ⑤ 07 / 03	①

KEY NO		PART NO	PART NAME	SPEC	Q'TY	REPAIR	EIG SERIAL NO	REMARKS
023	001	14571042001	RADIATOR SET		1			
023	002	14571042101	RADIATOR SET		1			
023	003	14571042171	SHROUD		1			
023	006	14571[illegible]301HB	NET COMP		1			
02[illegible]	[illegible]7	V271[illegible]12	BOLT , WING	M6X12				

NOTE	⑬

① Group Indication : Indicate the relevant location of the part with a symbol illustration.

② Figure Number: Indicate the relevant section of the machine with a figure number.

③ Section Name : Indicate the section name of the machine

④ Section Page : Page number of the section in this catalogue.

⑤ Date : Show the Month/Year of the section made or updated

⑥ Key number : Indicating number of each parts in the illustration.

⑦ Part Number : Unique part number maintained in our system

The part number starting with V or M means it is TYM's standard part

The alphabet at the end of part number means the status of material or the color of paint

Legend : M:Machining, DG:Dark Gray, BR:Bright Red, SW:Summer White, PB:Pure Black, GB:Glossy Black, SR:Super Red, MS:Metallic Silver DD:Heat proof Black, TY: Tangerine Yellow etc.

⑧ Description : Description of a part, Abbreviation means as follows.

- Indicate the mixture condition of a part

ASSY : Assembly with a mixture of several parts, so can be broke up retaining their original form

COMP : Assembly with a mixture of several parts, but can not be broke up retaining their original form

SUB : mean the same as ASSY but used in lower level in aid.

SET : Part consist of ASSY, COMP, and part(s) as a group

- Indicate the location of a part

LH: Left, RH: Right, FR: Front, RR: Rear, UPR: Upper, LOW: Lower

⑨ Type : Type of the standard items like bolt or nut

⑩ Quantity : Total quantity of the part referred to in the page.

Symbol below indicate options. So, show the quantity of each option.

Note) AR means as requested quantity.

⑪ Repair Parts consumption frequency class: indicate the level of a part in aid of stocking spares, anticipating the service requirements.

A :Fast moving part(frequently required)

B :Medium moving part (sometimes required)

C :Slow moving part(rarely required)

⑫ Modification :

Year/Month~ : From which the change starts

~ Year/Month : To which the part installed

⑬ Notes : explain some reference data

⑭ Remark : indicate reference data or abbreviation in the content.

ENGINEERING GROUP INDEX

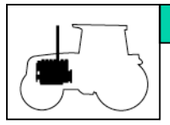
1 ENGINE

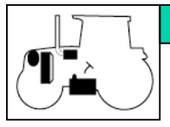
2 ENGINE ACCESSORIES & CONTROL

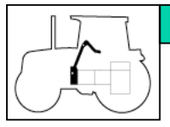
3 CLUTCH & CONTROL

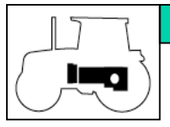
4 TRANSMISSION & REAR AXLE

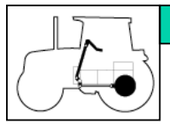
5 BRAKE & CONTROL

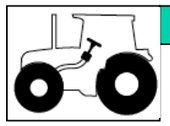
6 TIRE,RIM & POWER STEERING

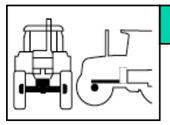
7 FRONT AXLE,SUPPORTER & DRIVE SHAFT

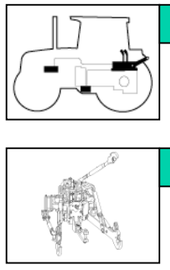
8 HYDRAULICS

9 3- POINT LINK

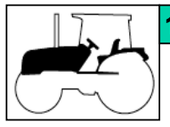
10 SHEET METAL & SEAT

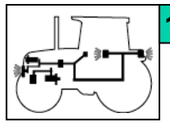
11 ELECTRICALS & HARNESS

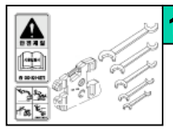
12 WEIGHT, LABEL & TOOLS

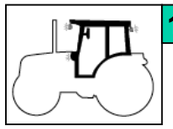
13 CABIN

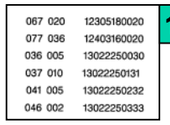
14 NUMERICAL INDEX

CONTENTS

ENGINE

1 ENGINE(4A220 -DY) PART NO. : 1451 100 200 0

FIG 010 CYLINDER BLOCK GROUP ----------4
FIG 020 OIL PAN GROUP----------6
FIG 030 CYLINDER HEAD GROUP----------8
FIG 040 GEAR CASE GROUP----------10
FIG 050 MAIN BEARING CASE GROUP----------12
FIG 080 VALVE & ROCKER ARM GROUP----------14
FIG 090 CYLINDER HEAD COVER GROUP----------16
FIG 100 CAMSHAFT GROUP----------18
FIG 110 PISTON CRANKSHAFT GROUP----------20
FIG 120 FLYWHEEL GROUP----------22
FIG 130 NOZZLE HOLDER GROUP----------24
FIG 140 FUEL CAMSHAFT GROUP----------26
FIG 150 SPEED CONTROL LEVER GROUP----------28
FIG 160 ENGINE STOP LEVER GROUP----------30
FIG 170 GOVERNOR GROUP----------32
FIG 180 WATER PUMP GROUP----------34
FIG 190 WATER PIPE GROUP----------36
FIG 200 DYNAMO GROUP----------38
FIG 220 MANIFOLD GROUP----------40
FIG 240 OPTION GROUP----------42

CONTENTS

CHASSIS

2 ENGINE ACCESSORIES & CONTROL

FIG 022 AIR CLEANER----------48
FIG 023 RADIATOR----------50
FIG 024 MUFFLER----------52
FIG 025 FUEL TANK----------54
FIG 026 SUB FUEL TANK----------56
FIG 027 ACCELERATOR----------58

3 CLUTCH & CONTROL

FIG 029 CLUTCH----------64
FIG 030 CLUTCH PEDAL----------66

4 TRANSMISSION & REAR AXLE

FIG 031 TRANSMISSION FRONT CASE----------72
FIG 032 INPUT & COUNTER GEARS----------74
FIG 033 MAIN & CHANGE GEARS----------76
FIG 034 REVERSE GEARS----------78
FIG 036 P.T.O DRIVE SHAFT----------80
FIG 037 MAIN CHANGE LEVER----------82
FIG 038 REVERSE CHANGE LEVER----------84
FIG 039 TRANSMISSION MID CASE----------86
FIG 043 TRANSMISSION REAR CASE----------88
FIG 044 SUB CHANGE GEARS----------90
FIG 045 SUB CHANGE LEVER----------92
FIG 047 4WD DRIVE GEARS----------94
FIG 050 4WD CHANGE LEVER----------96
FIG 051 P.T.O CHANGE GEARS----------98
FIG 052 P.T.O CHANGE LINKAGE----------100
FIG 053 P.T.O CHANGE LEVER----------102
FIG 054 REAR DIFFERENTIAL GEARS----------104
FIG 055 REAR AXLE & HOUSINGS----------106

5 BRAKE & CONTROL

FIG 056 BRAKE ----------112
FIG 057 BRAKE PEDAL & LINKAGE----------114

6 TIRE, RIM & POWER STEERING

FIG 058 REAR WHEEL MOUNTING----------120
FIG 059 STEERING WHEEL----------122
FIG 062 STEERING VALVE & CYLINDER----------124
FIG 068 FRONT WHEEL MOUNTING----------126

7 FRONT AXLE

FIG 063 FRONT AXLE BRACKET----------132
FIG 064 FRONT DIFFERENTIAL GEARS & SHAFT----------134
FIG 065 FRONT AXLE HOUSING----------136
FIG 066 FRONT GEAR CASE (1)----------138
FIG 067 FRONT GEAR CASE (2)----------140

CONTENTS

8 HYDRAULIC

FIG 061 GEAR PUMP----------146
FIG 069 CYLINDER CASE----------148
FIG 070 LIFT ARM----------150
FIG 071 CYLINDER----------152
FIG 073 POSITION LINK----------154
FIG 075 CONTROL VALVE----------156
FIG 076 DRAFT LINK----------158
FIG 077 POSITION & DRAFT LEVER----------160
FIG 081 HYDRAULIC PIPE (1)----------162
FIG 082 HYDRAULIC PIPE (2)-DRUM TYPE----------164
FIG 082A HYDRAULIC PIPE (2)-SPIN ON TYPE----------166
FIG 083 P.T.O VALVE & RELIEF VALVE----------168
FIG 128 EXTERIOR HYD.VALVE----------170

9 3-POINT LINK

FIG 084 LINK BRACKET----------176
FIG 085 HITCH & 3-POINT LINK----------178
FIG 086 LOWER LINK & LIFT ROD----------182

10 SHEET METAL & SEAT

FIG 090 BONNET (1)----------188
FIG 091 BONNET (2)----------192
FIG 092 SIDE COVER----------194
FIG 093 LEVER COVER----------196
FIG 094 FRONT & REAR MOUNTING----------198
FIG 095 FLOOR & SEAT----------200

11 ELECTRICALS & HARNESS

FIG 099 BATTERY & MOUNTING----------206
FIG 100 LIGHTS----------208
FIG 101 INSTRUMENT PANEL----------210
FIG 102 ELECTRIC SYSTEM----------212
FIG 105 P.T.O CONTROL SWITCH----------214
FIG 106 HARNESS (1)----------216
FIG 108 HARNESS (2)----------218

12 WEIGHT, LABEL & TOOLS

FIG 124 TOOL & ACCESSORY----------224
FIG 146 LABEL----------226
FIG 157 WEIGHT----------230

13 CABIN

FIG 160 FRAME & REAR GLASS----------236
FIG 161 SIDE GLASS----------238
FIG 162 DOOR----------240
FIG 163 FRONT GLASS----------242
FIG 164 FENDER & COVER----------244
FIG 165 CONTROL COVER----------246
FIG 166 ROOF----------248
FIG 167 INTER PARTS----------250
FIG 168 HEATER & AIR-CON----------252

14 NUMERICAL INDEX

ENGINE(4A220DY)----------259
CHASSIS----------262

FIG 010 4510C	CYLINDER BLOCK GROUP	P1	Month/Year 01 / 2004

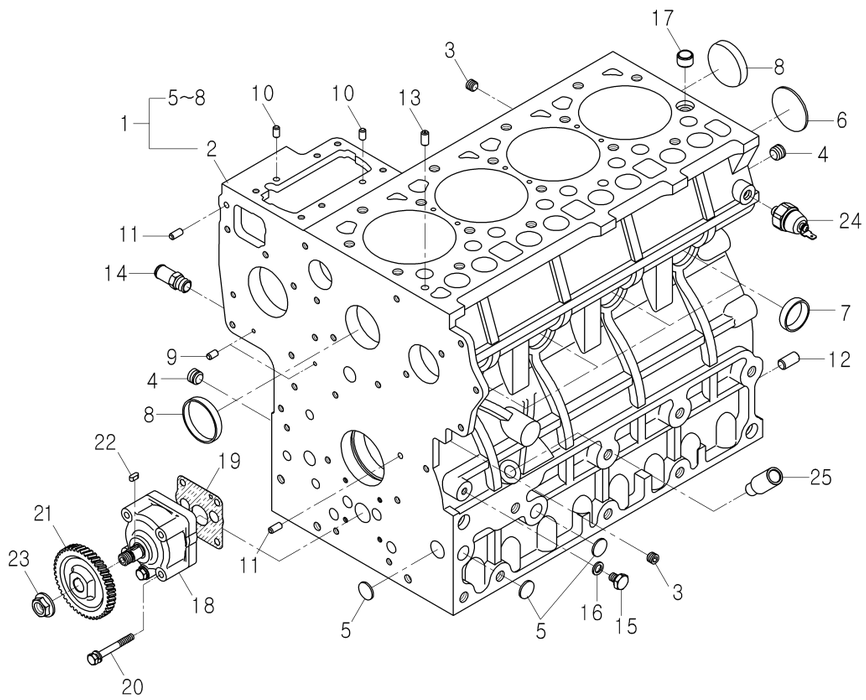

NOTE 4A220-DY

FIG 010 4510C	CYLINDER BLOCK GROUP	P1	Month / Year 01 / 2004

KEY NO.		PART NO.	DESCRIPTION	SPEC.	QTY.	REPAIR	E/G SERIAL NO.	REMARKS
010	001	E6301-A0015	CYLINDER BLOCK ASSEMBLY		1	C		
010	002	E6301-01116	CYLINDER BLOCK		1			
010	003	E5900-96021	PLUG		6	B		
010	004	E5900-96031	PLUG		2			
010	005	06311-75018	PLUG		3			
010	006	06311-75045	PLUG		1			
010	007	15221-0338-3	SEALING CAP		6	B		
010	008	15221-0339-2	SEALING CAP		2	B		
010	009	05012-00408	STRAIGHT PIN		2			
010	010	05012-00609	STRAIGHT PIN		2			
010	011	05012-00612	STRAIGHT PIN		2			
010	012	05012-01018	STRAIGHT PIN		1	B		
010	013	15221-3365-1	PIPE PIN		1			
010	014	E5500-73342	WATER RETURN PIPE		1	B		
010	015	15221-3361-1	PLUG		1			
010	016	15021-3366-1	GASKET		1	B		
010	017	E6301-33812	PIPE PIN		1			
010	018	E6200-35012	OIL PUMP ASSEMBLY		1	C		
010	019	E5500-35152	OIL PUMP GASKET		1	B		
010	020	01023-50650	BOLT WITH WASHER		4			
010	021	19202-3566-1	OIL PUMP DRIVE GEAR		1	B		
010	022	05712-00410	KEY		1			
010	023	E6300-35681	FLANGE NUT		1			
010	024	E5500-39013	OIL SWITCH		1	B		
010	025	E6300-35692	OIL GAUGE GUIDE		1	B		

NOTE 4A220-DY

FIG 020	OIL PAN GROUP	P1	Month/Year
4510C			01 / 2004

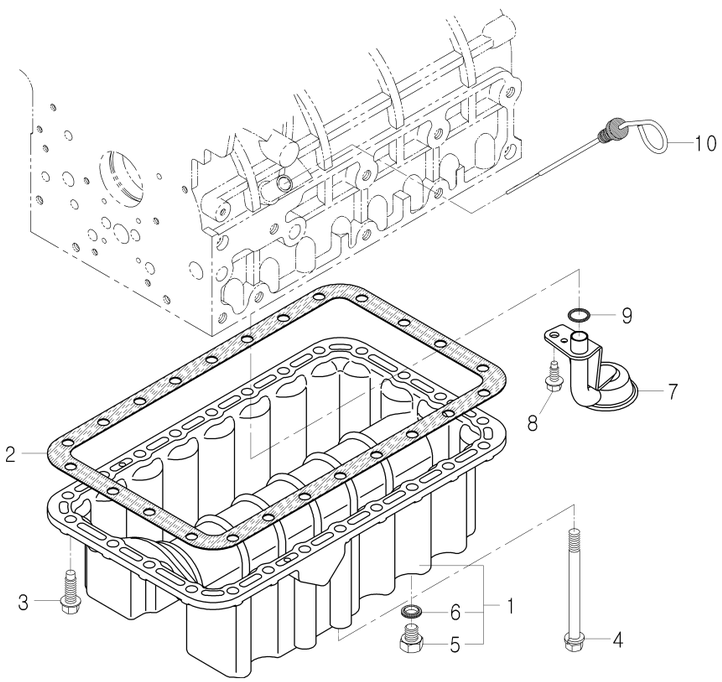

NOTE 4A220-DY

FIG 020	OIL PAN GROUP	P1	Month / Year
4510C			01 / 2004

KEY NO.		PART NO.	DESCRIPTION	SPEC.	QTY.	REPAIR	E/G SERIAL NO.	REMARKS
020	001	E6200-A0071	OIL PAN ASSEMBLY		1	C		
020	002	E6200-01623	OIL PAN GASKET		1	B		
020	003	01674-51032	FLANGE BOLT WITH PIN		22	B		
020	004	E6200-91092	BOLT WITH WASHER		2			
020	005	15221-3375-2	PLUG		2	B		
020	006	04717-01200	SEAL WASHER		2			
020	007	E6200-32112	OIL FILTER 1		1	A		
020	008	01654-50820	FLANGE BOLT WITH PIN		1			
020	009	04811-00160	O RING		1			
020	010	E6305-36411	OIL GAUGE		1			

NOTE 4A220-DY

FIG 030	CYLINDER HEAD GROUP	P1	Month/Year
4510C			01 / 2004

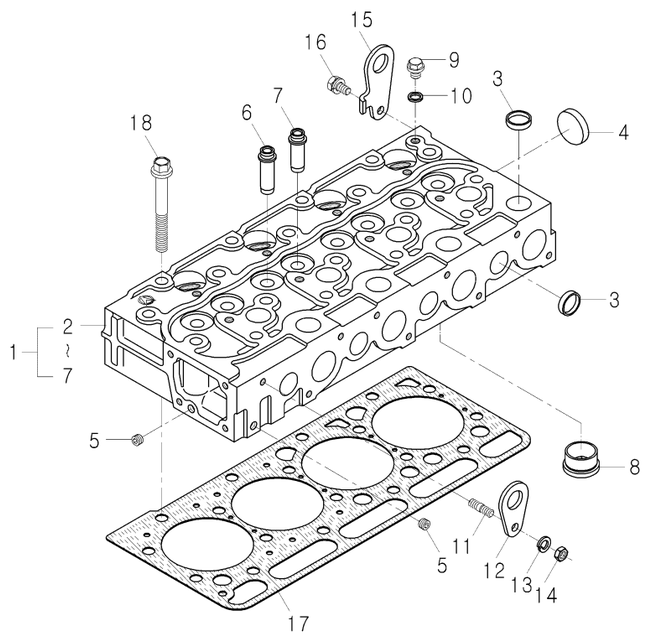

NOTE 4A220-DY

FIG 030	CYLINDER HEAD GROUP	P1	Month / Year
4510C			01 / 2004

KEY NO.		PART NO.	DESCRIPTION	SPEC.	QTY.	REPAIR	E/G SERIAL NO.	REMARKS
030	001	E6301-03052	CYLINDER HEAD ASSEMBLY		1	C		
030	002	E6301-03122	CYLINDER HEAD		1			
030	003	15221-0337-3	SEALING CAP		12	B		
030	004	15221-0349-3	SEALING CAP		1	B		
030	005	E5900-96021	PLUG		2	B		
030	006	E6301-13581	INLET VALVE GUIDE		4	B		
030	007	E6301-13561	EXHAUST VALVE GUIDE		4	B		
030	008	E6301-03148	HOT PLUG		4			
030	009	06311-55010	PLUG		1			
030	010	04724-00100	PACKING		1			
030	011	01513-50822	STUD		1			
030	012	15221-0175-1	ENGINE HOOK		1			
030	013	04512-50080	SPRING WASHER		1			
030	014	02156-50080	NUT		1			
030	015	E6305-01751	ENGINE HOOK		1			
030	016	01123-50816	BOLT WITH WASHER		1			
030	017	E6301-03313	HEAD GASKET		1	B		
030	018	E6300-03453	HEAD BOLT		18	B		

NOTE 4A220-DY

FIG 040	GEAR CASE GROUP	P1	Month/Year
4510C			01 / 2004

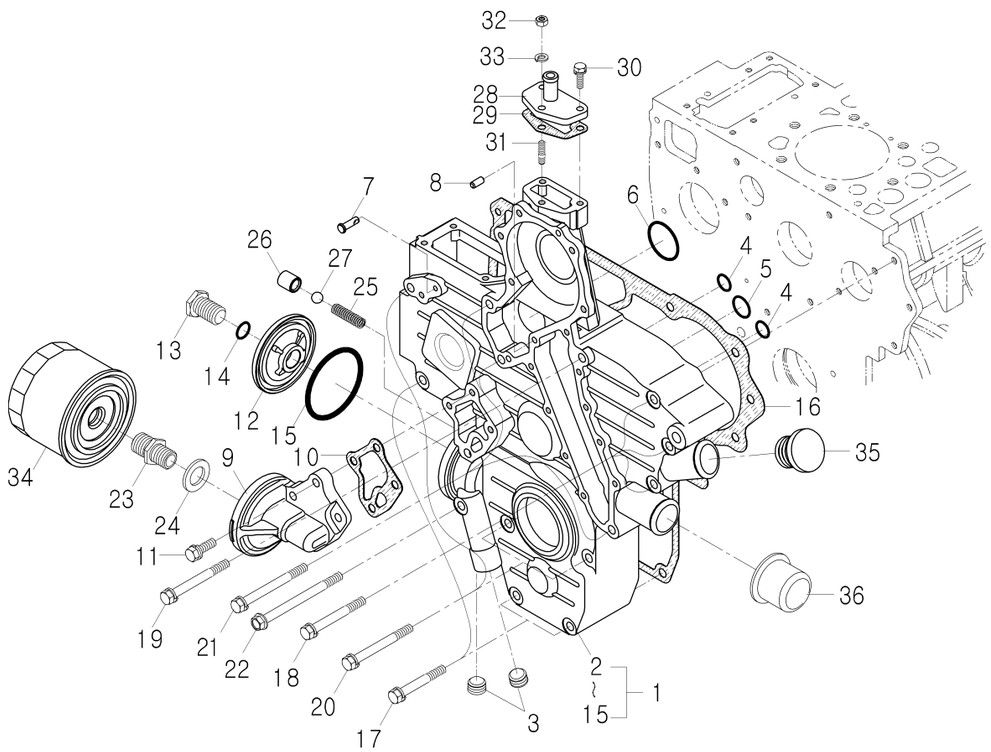

NOTE 4A220-DY

FIG 040		P1	Month / Year
4510C			01 / 2004

KEY NO.		PART NO.	DESCRIPTION	SPEC.	QTY.	REPAIR	E/G SERIAL NO.	REMARKS
040	001	E6306-A0016	GEARCASE ASSEMBLY		1	C		
040	002	E5612-04112	GEARCASE		1			
040	003	E5800-96031	PLUG		1			
040	004	04811-00150	O RING		1			
040	005	04811-00200	O RING		1	B		
040	006	04811-00360	O RING		1	B		
040	007	15221-5628-2	START SPRING PIN		1			
040	008	05012-00612	STRAIGHT PIN		1			
040	009	E6500-32612	OIL FILTER SUPPORT		1	B		
040	010	E5800-32621	GASKET		1			
040	011	01123-50825	BOLT WITH WASHER		1			
040	012	E5800-32882	COVER		1			
040	013	E5800-32912	COVER BOLT		1			
040	014	04811-00150	O RING		1			
040	015	E5800-96831	O RING		1			
040	016	E5800-04133	GEARCASE GASKET		1	B		
040	017	01123-50860	BOLT WITH WASHER		1			
040	018	01123-50870	BOLT WITH WASHER		1			
040	019	01123-50875	BOLT WITH WASHER		1			
040	020	01123-50880	BOLT WITH WASHER		1			
040	021	01123-50885	BOLT WITH WASHER		1			
040	022	01754-50801	FLANGE BOLT		1			
040	023	15521-3229-1	JOINT PIPE		1	B		
040	024	04011-50180	PLAIN WASHER		1			
040	025	15241-3695-2	SPRING		1			
040	026	E5500-36932	VALVE SEAT		1			
040	027	07715-03213	STEEL BALL		1			
040	028	15521-7332-1	WATER RETURN FLANGE		1			
040	029	15521-7333-1	WATER RETURN FLANGE GASKET		1	B		
040	030	01023-50620	BOLT WITH WASHER		2			
040	031	01513-50616	STUD		1			
040	032	02056-50060	NUT		1			
040	033	04512-50060	SPRING WASHER		1			
040	034	E6201-32443	OIL FILTER		1	A		
040	035	E5800-33143	OIL PLUG		1			
040	036	E6300-11912	WATER PIPE COVER		1			

NOTE 4A220-DY

FIG 050	MAIN BEARING CASE GROUP	P1	Month/Year
4510C			01 / 2004

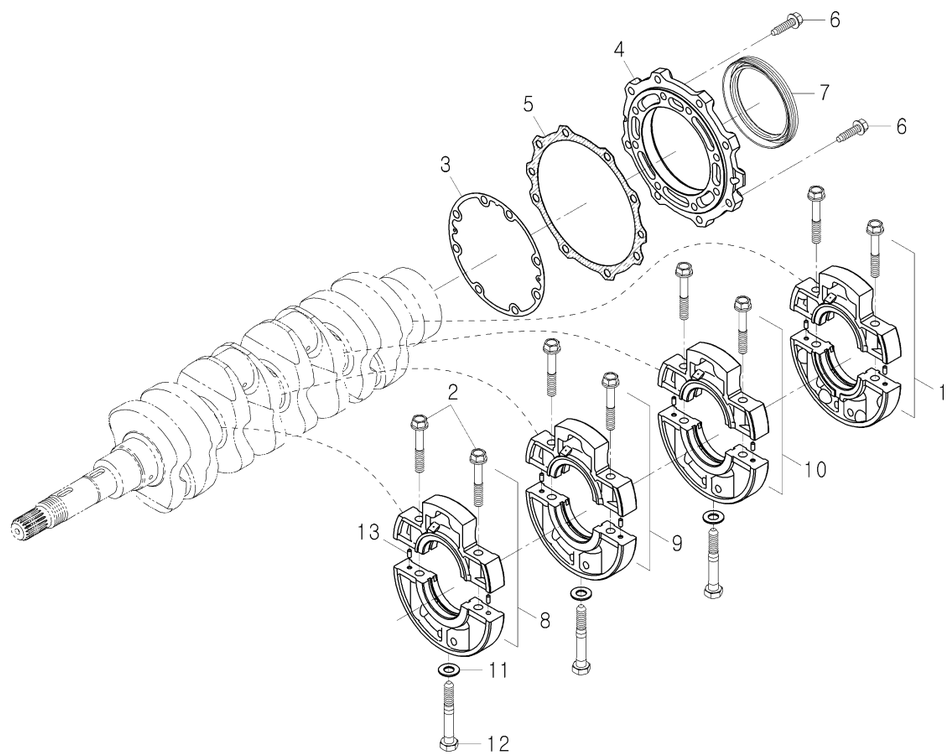

NOTE 4A220-DY

FIG 050 | MAIN BEARING CASE GROUP | P1 | Month / Year | 4510C | 01 / 2004

KEY NO.		PART NO.	DESCRIPTION	SPEC.	QTY.	REPAIR	E/G SERIAL NO.	REMARKS
050	001	E6300-A0033	MAIN BEARING CASE ASSEMBLY		1	C		
050	002	E6300-04542	BEARING CASE BOLT 1		8			
050	003	E6300-04362	BEARING CASE GASKET		1	B		
050	004	E6300-04812	BEARING CASE COVER		1	B		
050	005	E6300-04821	BEARING CASE COVER GASKET		1	B		
050	006	01654-50830	FLANGE BOLT WITH PIN		16			
050	007	E5500-04464	OIL SEAL		1	B		
050	008	E6300-A0043	MAIN BEARING CASE ASSEMBLY 1		1	C		
050	009	E6300-A0053	MAIN BEARING CASE ASSEMBLY 2		1	C		
050	010	E6300-A0063	MAIN BEARING CASE ASSEMBLY 3		1	C		
050	011	15521-9402-1	WASHER		3			
050	012	15291-0456-2	BEARING CASE BOLT 2		3	B		
050	013	05012-00408	STRAIGHT PIN		8			

NOTE 4A220-DY

FIG 080	VALVE & ROCKER ARM GROUP	P1	Month/Year
4510C			01 / 2004

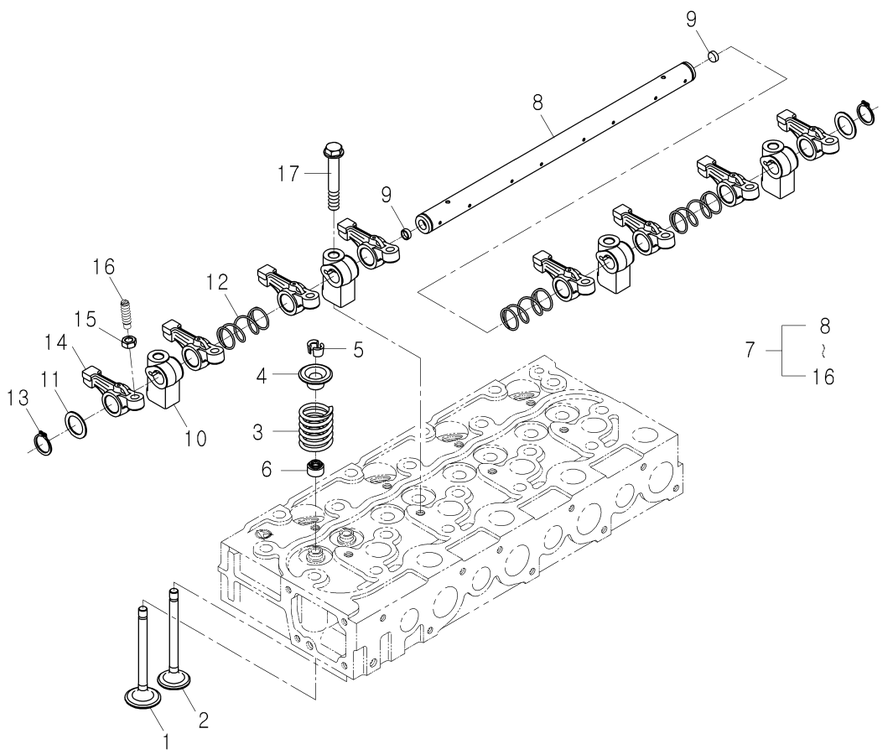

NOTE 4A220-DY

FIG 080	GROUP	P1	Month / Year
4510C			01 / 2004

KEY NO.		PART NO.	DESCRIPTION	SPEC.	QTY.	REPAIR	E/G SERIAL NO.	REMARKS
080	001	E6301-13111	INLET VALVE		4	B		
080	002	E6301-13121	EXHAUST VALVE		4	B		
080	003	15221-1324-2	VALVE SPRING		8	B		
080	004	E5500-13332	VALVE SPRING RETAINER		8	B		
080	005	E5500-13362	VALVE SPRING COLLET		16	B		
080	006	E6301-13151	VALVE STEM SEAL		8	B		
080	007	E6301-14001	ROCKER ARM SHAFT ASSEMBLY		1			
080	008	E6301-14261	ROCKER ARM SHAFT		1			
080	009	E6301-14331	SEALING CAP		2			
080	010	E6301-14351	ROCKER ARM BRACKET		4			
080	011	E6301-14431	PLAIN WASHER		2			
080	012	E6301-14311	ROCKER ARM SPRING		3			
080	013	04612-00190	SNAP RING		2			
080	014	E6301-14111	ROCKER ARM		8			
080	015	15021-1424-1	ADJUSTING NUT		8			
080	016	E5500-14232	ADJUSTING SCREW		8			
080	017	E6510-91501	ROCKER ARM BRACKET BOLT		4			

NOTE 4A220-DY

FIG 090	CYLINDER HEAD COVER GROUP	P1	Month/Year
4510C			01 / 2004

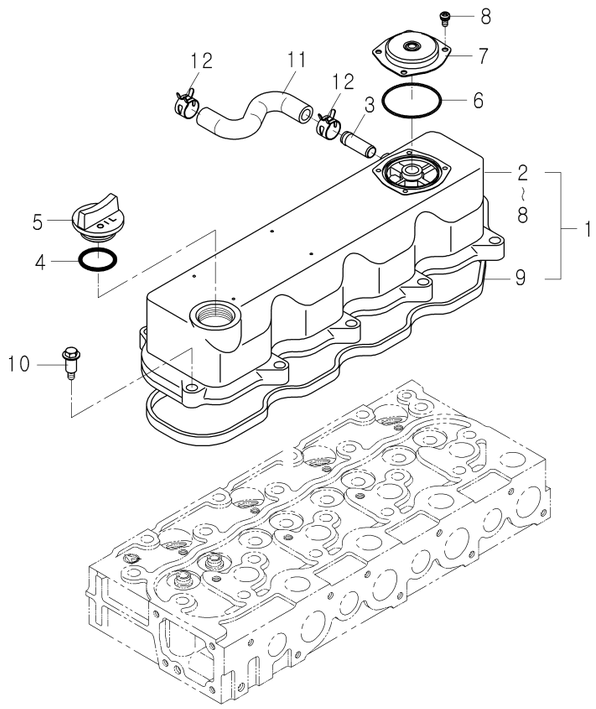

NOTE 4A220-DY

FIG 090	CYLINDER HEAD COVER GROUP	Month / Year
4510C		01 / 2004

KEY NO.		PART NO.	DESCRIPTION	SPEC.	QTY.	REPAIR	E/G SERIAL NO.	REMARKS
090	001	E6510-14502	CYLINDER HEAD COVER ASSEMBLY		1	C		
090	002	E6510-14512	CYLINDER HEAD COVER		1			
090	003	E6510-05551	BREATHER PIPE CONNECTOR		1			
090	004	04811-50300	O RING		1			
090	005	E5500-33142	OIL FILLER PLUG		1			
090	006	E6510-14671	O RING		1			
090	007	E6510-14532	VALVE COVER		1			
090	008	03024-50510	SCREW		4			
090	009	E6200-14523	CYLINDER HEAD COVER GASKET		1			
090	010	E6510-33661	HEAD COVER BOLT		10			
090	011	E6510-05511	AIR BREATHER PIPE		1			
090	012	09318-88180	BAND		2			

NOTE 4A220-DY

FIG 100	CAMSHAFT GROUP	P1	Month/Year
4510C			01 / 2004

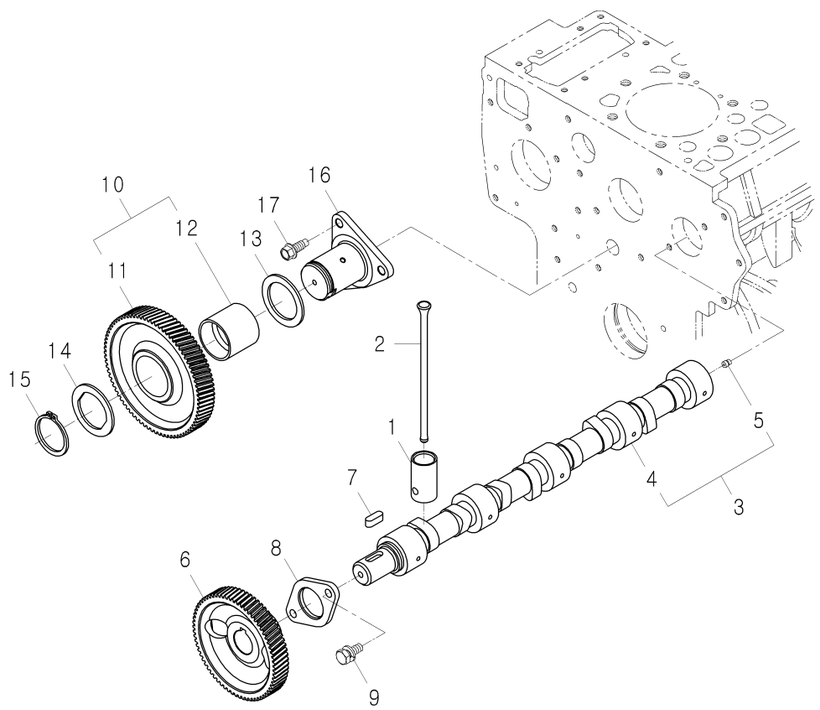

NOTE 4A220-DY

FIG 100	CAMSHAFT GROUP	P1	Month / Year
4510C			01 / 2004

KEY NO.		PART NO.	DESCRIPTION	SPEC.	QTY.	REPAIR	ENG SERIAL NO	REMARKS
100	001	E5500-15553	TAPPET		8	B		
100	002	E6300-15113	PUSH ROD		8	B		
100	003	E6301-A0034	CAMSHAFT ASSEMBLY		1	C		
100	004	E6301-16156	CAMSHAFT		1			
100	005	06350-00607	PLUG		2			
100	006	15521-1651-1	CAMSHAFT GEAR		1			
100	007	05712-00720	KEY		1			
100	008	E5500-16272	CAMSHAFT STOPPER		1			
100	009	01123-50818	BOLT WITH WASHER		2			
100	010	E6300-24012	IDLE GEAR ASSEMBLY		1	C		
100	011	E6300-24212	IDLE GEAR		1			
100	012	E6300-24281	IDLE GEAR BUSH		1			
100	013	E6300-24361	COLLAR 1		1			
100	014	E6300-24371	COLLAR 2		1			
100	015	E6300-24321	CIR-CLIP		1			
100	016	E6300-24251	IDLE GEAR SHAFT		1			
100	017	01754-50820	FLANGE BOLT WITH PIN		3			

NOTE 4A220-DY

FIG 110	PISTON CRANKSHAFT GROUP	P1	Month/Year
4510C			01 / 2004

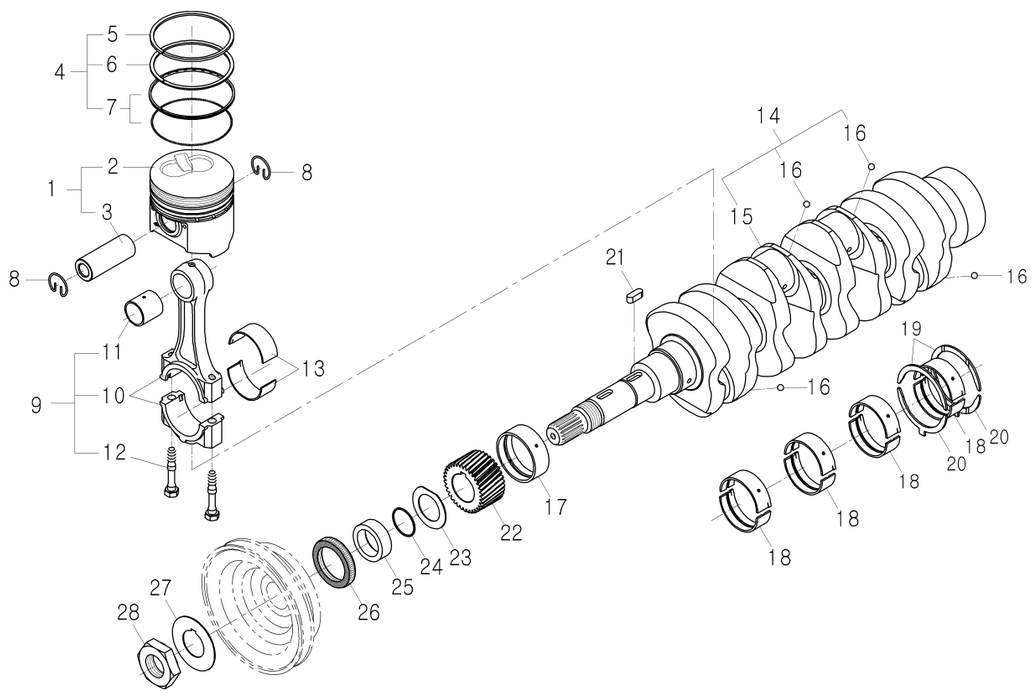

NOTE 4A220-DY

FIG 110	PISTON CRANKSHAFT GROUP	P1	Month / Year
4510C			01 / 2004

KEY NO.		PART NO.	DESCRIPTION	SPEC.	QTY.	REPAIR	E/G SERIAL NO.	REMARKS
110	001	E6301-21016	PISTON ASSEMBLY		4	B		
110	002	E6301-21114	PISTON		4			
110	003	E6300-21313	PISTON PIN		4			
110	004	E6301-21053	PISTON RING ASSEMBLY		4	B		
110	005	E6301-21152	PISTON RING 1		4			
110	006	E6300-21162	PISTON RING 2		4			
110	007	E6301-21202	OIL RING ASSEMBLY		4			
110	008	E6300-21332	CIR-CLIP		8			
110	009	E6300-22015	CONNECTING ROD ASSEMBLY		4	C		
110	010	E6300-22113	CONNECTING ROD		4			
110	011	E6300-21353	BUSH		4			
110	012	E5500-22142	CONNECTING ROD BOLT		8	B		
110	013	E6300-22312	CRANK PIN METAL		8	B		
110	014	E5800-A0091	CRANK SHAFT ASSEMBLY		1	C		
110	015	E6305-23113	CRANKSHAFT		1			
110	016	07715-00401	STEEL BALL		4			
110	017	E6200-23472	CRANKSHAFT METAL 1		1	B		
110	018	E6200-23482	CRANKSHAFT METAL 2		8	B		
110	019	15521-2353-1	SIDE METAL 1		2	B		
110	020	19202-2354-1	SIDE METAL 2		2	B		
110	021	05712-00720	KEY		1			
110	022	E6200-24112	CRANKSHAFT GEAR		1	B		
110	023	15471-2331-1	OIL SLINGER		1			
110	024	04811-10300	O RING		1	B		
110	025	E6510-23251	CRANKSHAFT COLLAR		1	B		
110	026	E5500-11302	OIL SEAL		1	B		
110	027	E5500-23382	CRANKSHAFT WASHER		1	B		
110	028	15221-2336-1	CRANKSHAFT NUT		1			

NOTE 4A220-DY

FIG 120	FLYWHEEL GROUP	P1	Month/Year
4510C			01 / 2004

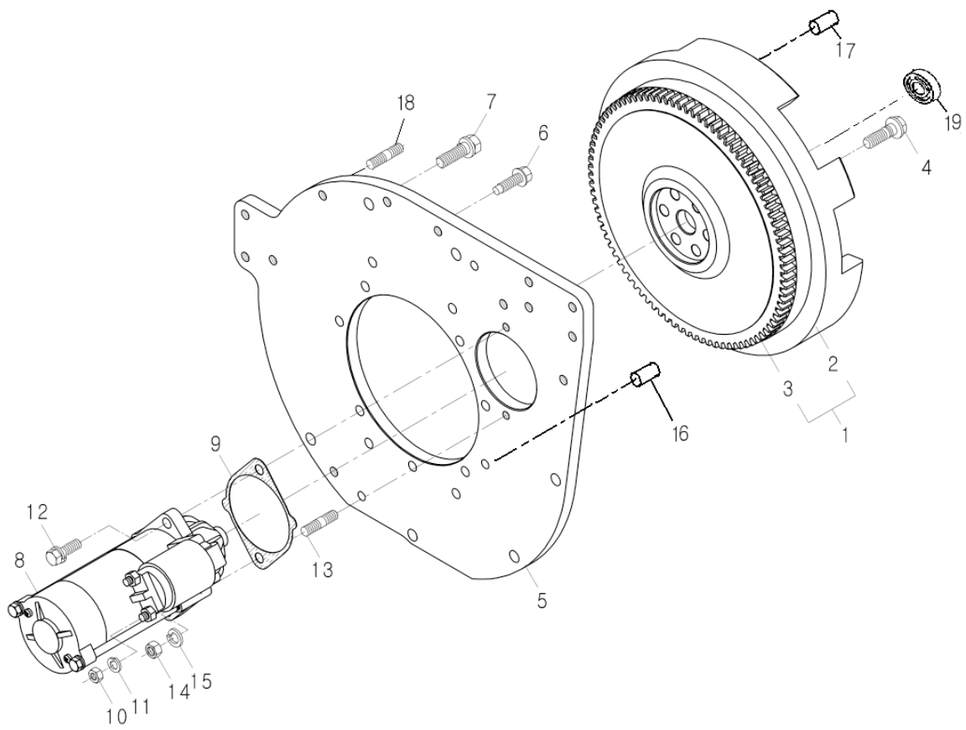

NOTE 4A220-DY

FIG 120	FLYWHEEL GROUP	P1	Month / Year
4510C			01 / 2004

KEY NO.		PART NO.	DESCRIPTION	SPEC.	QTY.	REPAIR	G SERIAL NO	REMARKS
120	001	E6536-25013	FLYWHEEL ASSEMBLY		1	C		
120	002	E6536-25112	FLYWHEEL		1			
120	003	15221-6382-4	RING GEAR		1	B		
120	004	E5500-25164	FLYWHEEL BOLT		6	B		
120	005	E6306-04612	REAR END PLATE		1	B		
120	006	01674-51032	FLANGE BOLT WITH PIN		11	B		
120	007	01133-51235	BOLT WITH WASHER		2			
120	008	E5500-63015	STARTER		1	C		
120	009	E6200-04622	GASKET		1	B		
120	010	02114-50080	NUT		1			
120	011	04512-50080	SPRING WASHER		1			
120	012	01133-51030	BOLT WITH WASHER		1			
120	013	01517-51028	STUD		1			
120	014	02176-50100	NUT		1			
120	015	04512-50100	SPRING WASHER		1			
120	016	V5201010020	PIN-PARALLEL/A		1			TYM
120	017	V5201008020	PIN-PARALLEL/A		3			TYM
120	018	16733412040	BOLT-STUD		2			TYM
120	019	15001106804	BEARING-BALL		1			TYM

NOTE 4A220-DY

FIG 130	NOZZLE HOLDER GROUP	P1	Month/Year
4510C			01 / 2004

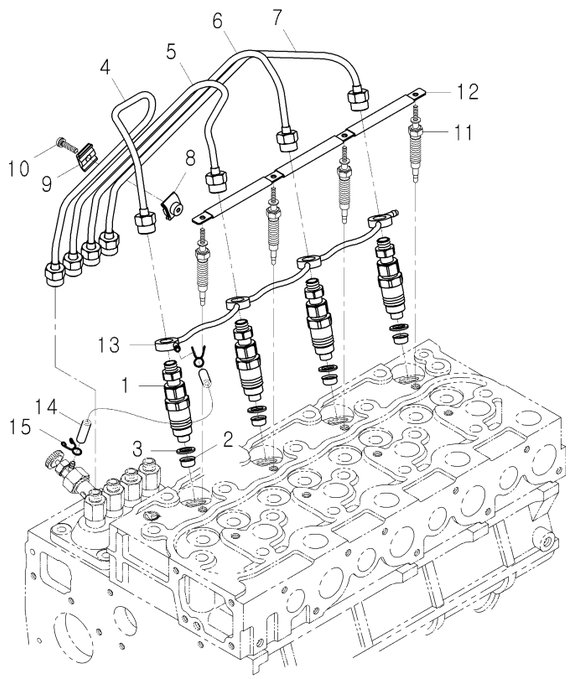

NOTE 4A220-DY

FIG 130 4510C NOZZLE HOLDER GROUP P1 Month / Year 01 / 2004

KEY NO.		PART NO.	DESCRIPTION	SPEC.	QTY.	REPAIR	E/G SERIAL NO.	REMARKS
130	001	E6300-53004	NOZZLE HOLDER ASSEMBLY		4	C		
130	002	E6300-53651	HEAT SEAL		4	B		
130	003	E6300-53621	GASKET		4	B		
130	004	E6301-53713	INJECTION PIPE 1		1			
130	005	E6301-53723	INJECTION PIPE 2		1			
130	006	E6301-53733	INJECTION PIPE 3		1			
130	007	E6301-53743	INJECTION PIPE 4		1			
130	008	15121-5385-2	PIPE CLAMP 1		3			
130	009	T4815-67371	PIPE CLAMP		3			
130	010	03024-50520	SCREW WITH WASHER		3			
130	011	E6301-65512	GLOW PLUG		4	B		
130	012	E6305-65562	GLOW PLUG CORD		1	B		
130	013	E6301-42501	OVERFLOW PIPE		1	B		
130	014	09661-40300	FUEL TUBE		1			
130	015	14971-4275-1	PIPE CLAMP		2	B		

NOTE 4A220-DY

FIG 140	FUEL CAMSHAFT GROUP	P1	Month/Year
4510C			01 / 2004

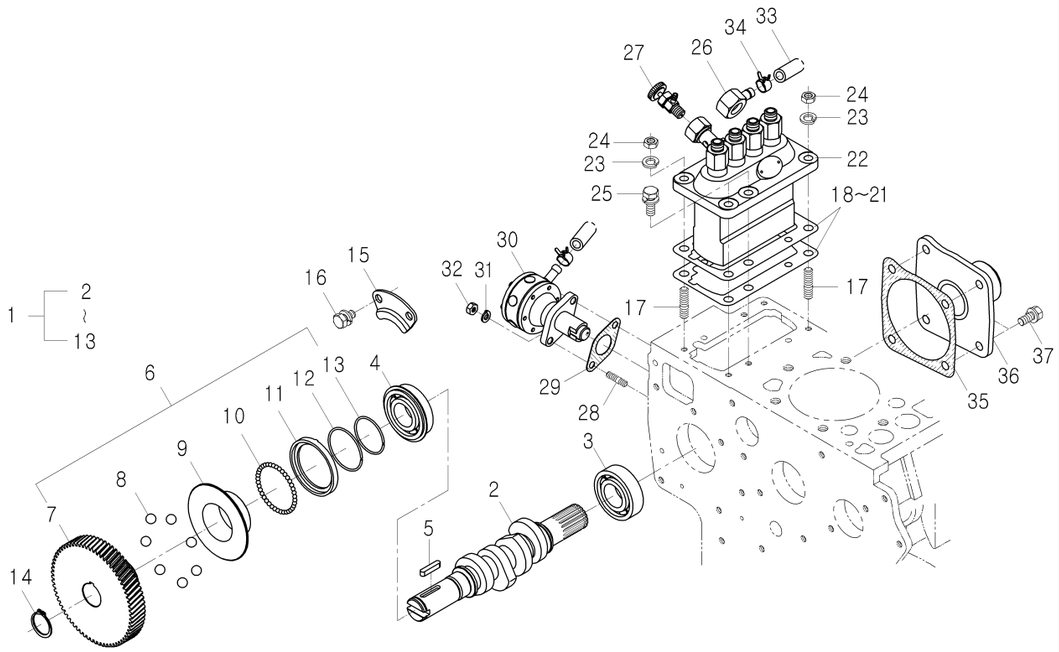

NOTE 4A220-DY

FIG 140	FUEL CAMSHAFT GROUP	P1	Month / Year
4510C			01 / 2004

KEY NO.		PART NO.	DESCRIPTION	SPEC.	QTY.	REPAIR	E/G SERIAL NO.	REMARKS
140	001	E6301-16029	FUEL CAMSHAFT ASSEMBLY		1	C		
140	002	E6301-16177	FUEL CAMSHAFT		1	C		
140	003	08240-00001	BALL BEARING		1			
140	004	08153-06205	BALL BEARING		1			
140	005	05712-00525	KEY		1	B		
140	006	E6300-A0011	GOVERNOR SLEEVE ASSEMBLY		1	C		
140	007	E6300-51152	INJECTION PUMP GEAR		1			
140	008	07715-00403	STEEL BALL		7			
140	009	E6300-55452	GOVERNOR SLEEVE		1			
140	010	07715-03205	STEEL BALL		39			
140	011	15221-5569-2	GOVERNOR BALL CASE		1			
140	012	15221-5574-1	BALL CASE CIR-CLIP		1			
140	013	15221-5547-1	CIR-CLIP		1			
140	014	04612-00240	SNAP RING		1			
140	015	15221-1632-1	FUEL CAMSHAFT STOPPER		1			
140	016	01123-50814	BOLT WITH WASHER		2			
140	017	01513-50822	STUD		2			
140	018	E6300-52111	INJECTION PUMP SHIM (T0.45)		4			
140	019	15471-5211-1	INJECTION PUMP SHIM 1(T0.3)		-			
140	020	15401-5211-2	INJECTION PUMP SHIM 2(T0.15)		-	B		
140	021	E6301-52111	INJECTION PUMP SHIM 3(T0.1)		-			
140	022	E6301-51012	INJECTION PUMP ASSEMBLY		1	C		
140	023	04512-50080	SPRING WASHER		2			
140	024	02156-50080	NUT		2			
140	025	01123-50822	BOLT WITH WASHER		4			
140	026	E5500-42412	FUEL PIPE JOINT		1			
140	027	84612-6050-0	JET START COCK ASSEMBLY		1	B		
140	028	01513-50618	STUD		2			
140	029	15241-5214-1	FUEL PUMP GASKET		1	B		
140	030	15381-5203-0	FUEL PUMP ASSEMBLY		1	C		
140	031	04512-50060	SPRING WASHER		2			
140	032	02056-50060	NUT		2			
140	033	15471-4211-1	FUEL HOSE		1			
140	034	14911-4275-1	CLIP		2			
140	035	T4240-36332	FUEL CAMSHAFT COVER GASKET		1	B		
140	036	E6200-16213	FUEL CAMSHAFT COVER		1			
140	037	01123-50818	BOLT WITH WASHER		4			

NOTE 4A220-DY

FIG 150	SPEED CONTROL LEVER GROUP	P1	Month/Year
4510C			01 / 2004

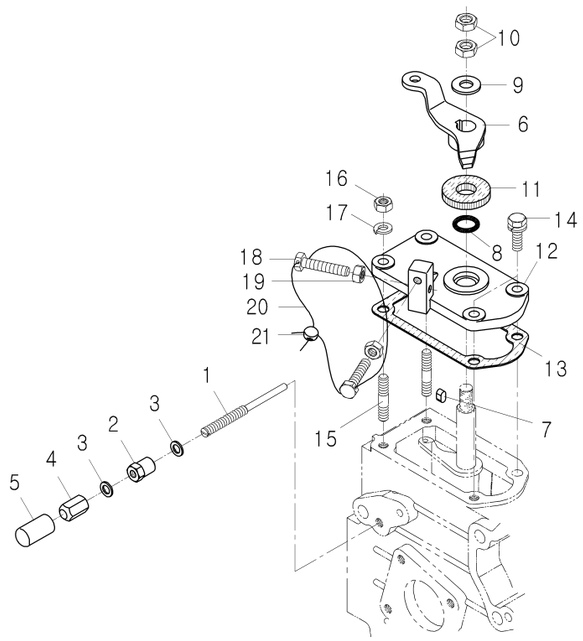

NOTE 4A220-DY

FIG 150	SPEED CONTROL LEVER GROUP	P1	Month / Year
4510C			01 / 2004

KEY NO.		PART NO.	DESCRIPTION	SPEC.	QTY.	REPAIR	E/G SERIAL NO.	REMARKS
150	001	15601-5412-1	ADJUSTING BOLT		1			
150	002	E6305-82021	NUT		1			
150	003	E6305-96652	GASKET		2			
150	004	E6305-54221	CAP NUT		1			
150	005	E6305-54421	CAP		1			
150	006	E5610-57151	SPEED CONTROL LEVER		1			
150	007	05712-00408	KEY		1			
150	008	04811-00120	O RING		1			
150	009	04013-50080	PLAIN WASHER		1			
150	010	02112-50080	NUT		2			
150	011	17011-5738-3	FRICTION PLATE		1			
150	012	E5800-57111	SPEED CONTROL PLATE		1			
150	013	E5800-57211	GASKET		1			
150	014	01023-50620	BOLT WITH WASHER		2			
150	015	01518-50622	STUD		2			
150	016	02056-50060	NUT		2			
150	017	04512-50060	SPRING WASHER		2			
150	018	15108-5728-4	STOPPER		2			
150	019	02056-50060	NUT		2			
150	020	07811-11210	WIRE		1			
150	021	07918-00001	SEALING LEAD		1			

NOTE 4A220-DY

FIG 160	ENGINE STOP LEVER GROUP	P1	Month/Year
4510C			01 / 2004

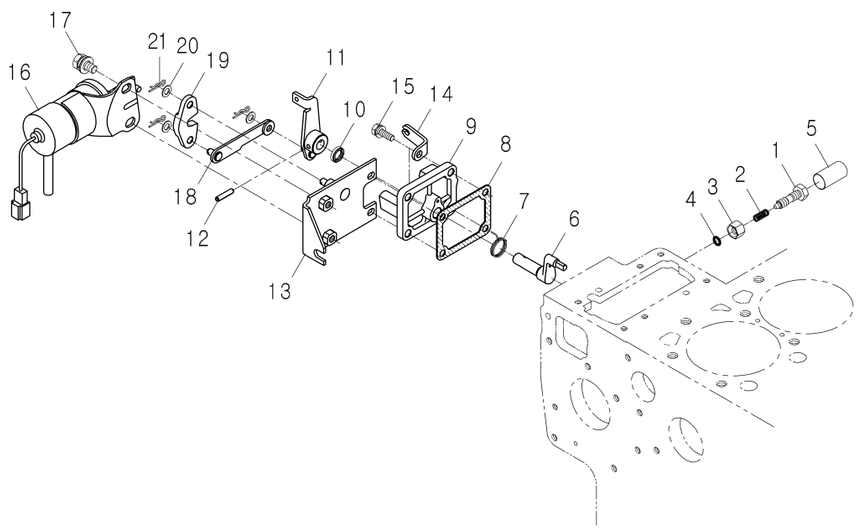

NOTE 4A220-DY

FIG 160	ENGINE STOP LEVER GROUP	P1	Month / Year
4510C			01 / 2004

KEY NO.		PART NO.	DESCRIPTION	SPEC.	QTY.	REPAIR	E/G SERIAL NO.	REMARKS
160	001	E6200-54252	ADJUSTING BOLT		1			
160	002	15521-5426-1	SPRING		1			
160	003	15471-9201-1	NUT		1			
160	004	04811-00060	O RING		1			
160	005	15521-5427-1	CAP		1			
160	006	E6300-57743	LEVER SHAFT		1			
160	007	E6200-57922	SPRING		1			
160	008	15221-5166-1	PUMP COVER GASKET		1	B		
160	009	E6200-51654	FUEL INJECTION PUMP COVER		1			
160	010	15471-5798-1	OIL SEAL		1	B		
160	011	E6200-57731	ENGINE STOP LEVER		1	B		
160	012	05411-00420	SPRING PIN		1			
160	013	E5800-60111	SOLENOID SUPPORT		1			
160	014	E6306-57481	WIRE HOLDER		1			
160	015	01023-50620	BOLT WITH WASHER		4			
160	016	E5753-60015	STOP SOLENOID ASSEMBLY		1	B		
160	017	01125-50816	BOLT WITH WASHER		2			
160	018	T4240-32642	STOP LEVER 1		1			
160	019	15471-6016-2	STOP LEVER 2		1	B		
160	020	04012-50060	PLAIN WASHER		3			
160	021	05525-50600	SNAP PIN		3			

NOTE 4A220-DY

FIG 170	GOVERNOR GROUP	P1	Month/Year
4510C			01 / 2004

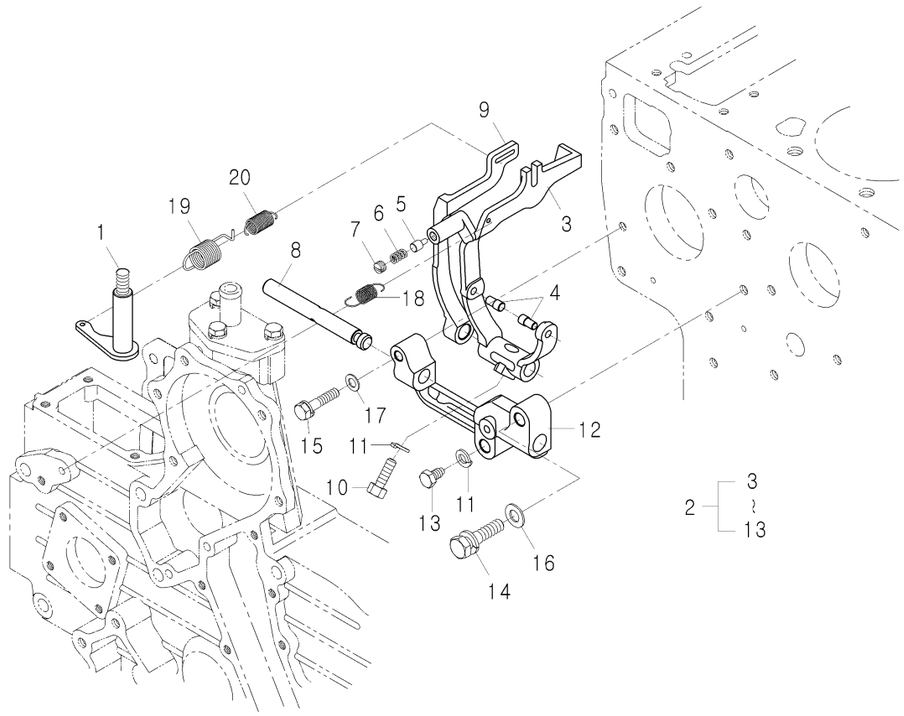

NOTE 4A220-DY

FIG 170	GOVERNOR GROUP	P1	Month / Year
4510C			01 / 2004

KEY NO.		PART NO.	DESCRIPTION	SPEC.	QTY.	REPAIR	E/G SERIAL NO.	REMARKS
170	001	15601-5602-1	GOVERNOR LEVER ASSEMBLY		1	C		
170	002	E6300-56053	FORK LEVER ASSEMBLY		1			
170	003	E6300-56122	FORK LEVER 1		1			
170	004	15021-5616-4	FORK LEVER PIN 1		2			
170	005	E6200-54172	PIN		1			
170	006	E6300-54231	SPRING		1			
170	007	15601-5443-1	SET SCREW		1			
170	008	15221-5615-1	FORK LEVER SHAFT		1			
170	009	E6300-56131	FORK LEVER 2		1			
170	010	15021-5624-3	LEVER SHAFT BOLT		1			
170	011	04512-50060	SPRING WASHER		2			
170	012	15221-5623-5	FORK LEVER HOLDER		1			
170	013	15221-6641-1	BOLT		1			
170	014	01123-50832	BOLT WITH WASHER		2			
170	015	01023-50628	BOLT WITH WASHER		1			
170	016	04012-50080	PLAIN WASHER		2			
170	017	04012-50060	PLAIN WASHER		1			
170	018	E6300-56481	START SPRING		1	B		
170	019	E6300-56414	GOVERNOR SPRING 1		1	B		
170	020	E6313-56421	GOVERNOR SPRING 2		1	B		

NOTE 4A220-DY

FIG 180	WATER PUMP GROUP	P1	Month/Year
4510C			01 / 2004

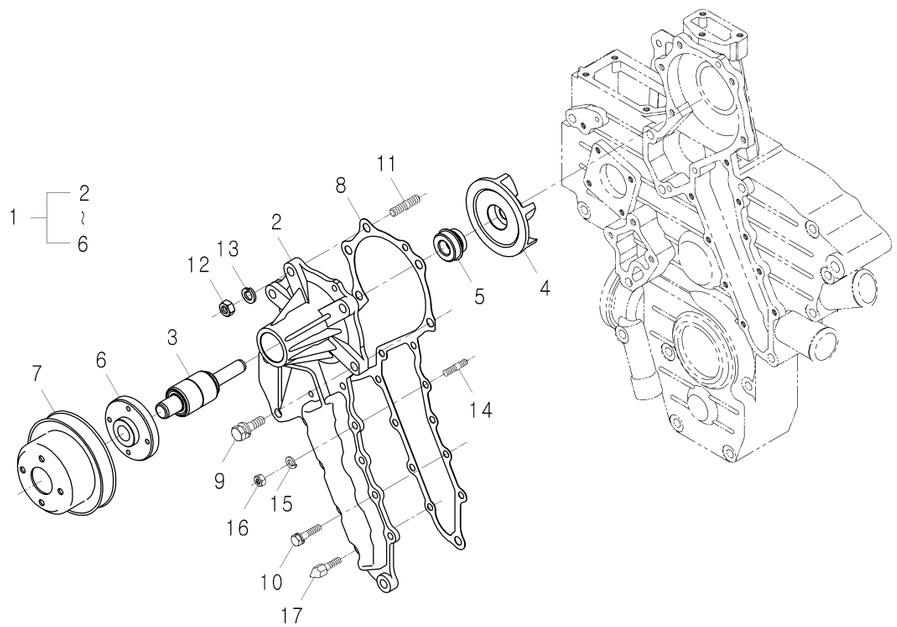

NOTE 4A220-DY

FIG 180		P1	Month / Year
4510C			01 / 2004

KEY NO.		PART NO.	DESCRIPTION	SPEC.	QTY.	REPAIR	E/G SERIAL NO.	REMARKS
180	001	E5800-73036	WATER PUMP ASSEMBLY		1	C		
180	002	E5800-73415	WATER PUMP BODY		1			
180	003	E5800-73551	WATER PUMP BEARING		1			
180	004	E5800-73513	IMPELLER		1			
180	005	E5800-73052	MECHANICAL SEAL ASSEMBLY		1	C		
180	006	E5800-73521	FLANGE		1			
180	007	E5800-74252	FAN PULLEY		1			
180	008	E5800-73431	WATER PUMP GASKET		1	B		
180	009	01123-50828	BOLT WITH WASHER		4			
180	010	01023-50618	BOLT WITH WASHER		7			
180	011	01518-50822	STUD		1			
180	012	02156-50080	NUT		1			
180	013	04512-50080	SPRING WASHER		1			
180	014	15221-8821-1	STUD		1			
180	015	04512-50060	SPRING WASHER		1			
180	016	02056-50060	NUT		1			
180	017	E6201-50619	TIMING BOLT		1			

NOTE 4A220-DY

FIG 190	WATER PIPE GROUP	P1	Month/Year
4510C			01 / 2004

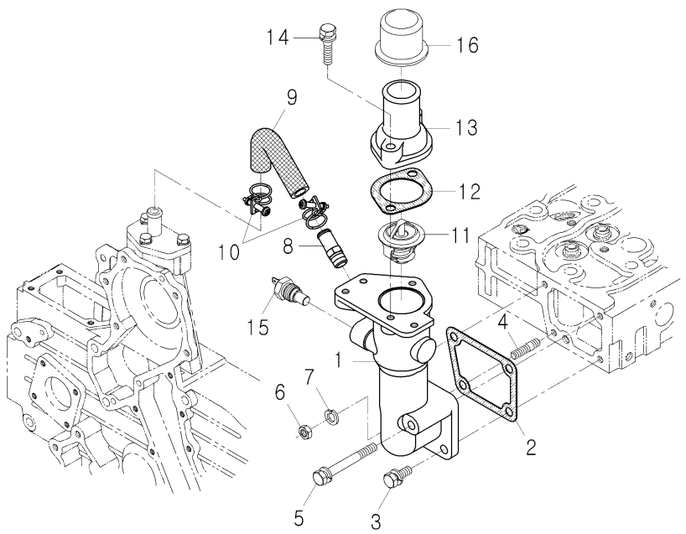

NOTE 4A220-DY

FIG 190		P1	Month / Year
4510C			01 / 2004

KEY NO.		PART NO.	DESCRIPTION	SPEC.	QTY.	REPAIR	E/G SERIAL NO.	REMARKS
190	001	E6306-72911	WATER FLANGE		1			
190	002	15521-7292-1	WATER FLANGE GASKET		1	B		
190	003	01123-50822	BOLT WITH WASHER		2			
190	004	01513-50822	STUD		1			
190	005	01123-50870	BOLT WITH WASHER		1			
190	006	02156-50080	NUT		1			
190	007	04512-50080	SPRING WASHER		1			
190	008	E5500-73342	WATER RETURN PIPE		1	B		
190	009	15521-7334-1	WATER RETURN PIPE		1	B		
190	010	15109-7336-4	PIPE BAND		2	B		
190	011	E5800-73011	THERMOSTAT ASSEMBLY		1	C		
190	012	15321-7327-1	THERMOSTAT COVER GASKET		1	B		
190	013	E5500-73263	THERMOSTAT COVER		1	B		
190	014	01123-50835	BOLT WITH WASHER		2			
190	015	15301-3283-0	THERMOMETER SWITCH		1	B		
190	016	E5500-74213	WATER PIPE COVER		1			

NOTE 4A220-DY

FIG 200	DYNAMO GROUP	P1	Month/Year
4510C			01 / 2004

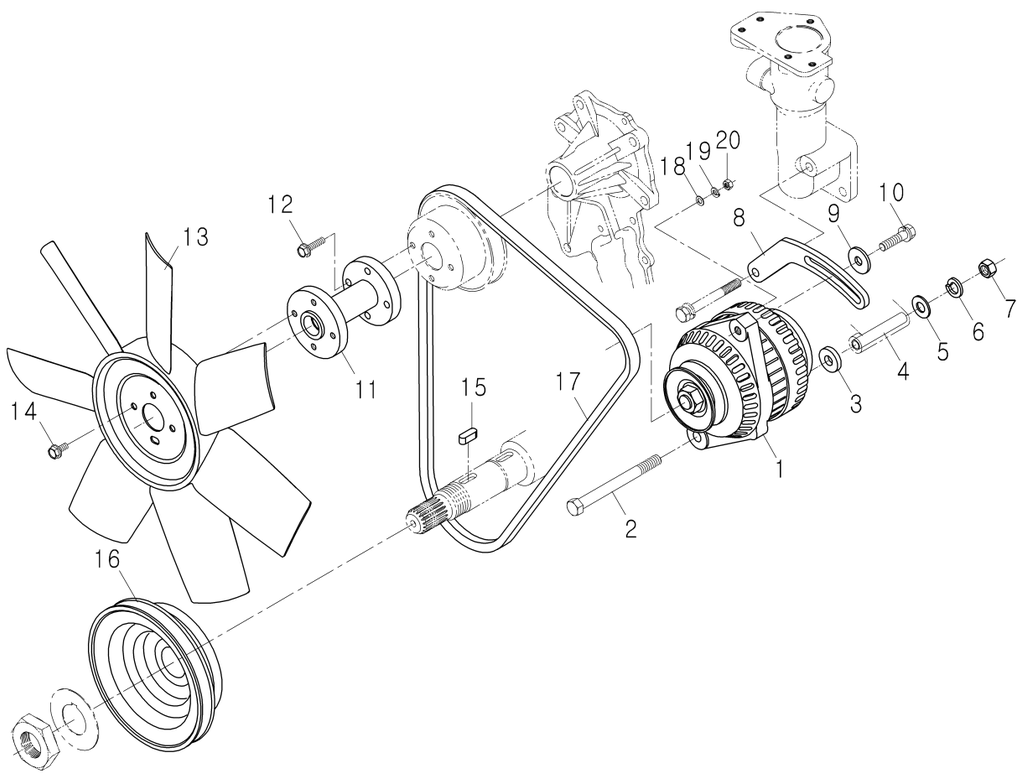

NOTE 4A220-DY

FIG 200 4510C | DYNAMO GROUP | P1 | Month / Year 01 / 2004

KEY NO.		PART NO.	DESCRIPTION	SPEC.	QTY.	REPAIR	E/G SERIAL NO.	REMARKS
200	001	E6306-64012	DYNAMO		1	C		
200	002	01153-50804	BOLT		1			
200	003	E5800-64102	SPACER		1			
200	004	E5620-64101	COLLAR		1			
200	005	04013-50080	PLAIN WASHER		1			
200	006	04512-50080	SPRING WASHER		1			
200	007	02114-50080	NUT		1			
200	008	E5800-64422	DYNAMO STAY		1			
200	009	04015-50080	PLAIN WASHER		1			
200	010	01123-50832	BOLT WITH WASHER		1			
200	011	E5800-74154	FAN COLLAR		1			
200	012	01754-50622	FLANGE BOLT		4	B		
200	013	15521-7411-1	COOLING FAN		1			
200	014	01754-50612	FLANGE BOLT		4			
200	015	05712-00720	KEY		1	B		
200	016	E6306-74282	FAN DRIVE PULLEY		1	A		
200	017	E5800-72531	FAN BELT		1			
200	018	04012-50050	PLAIN WASHER		1			
200	019	04512-50050	SPRING WASHER		1			
200	020	02054-50050	NUT		1			

NOTE 4A220-DY

FIG 220	MANIFOLD GROUP	P1	Month/Year
4510C			01 / 2004

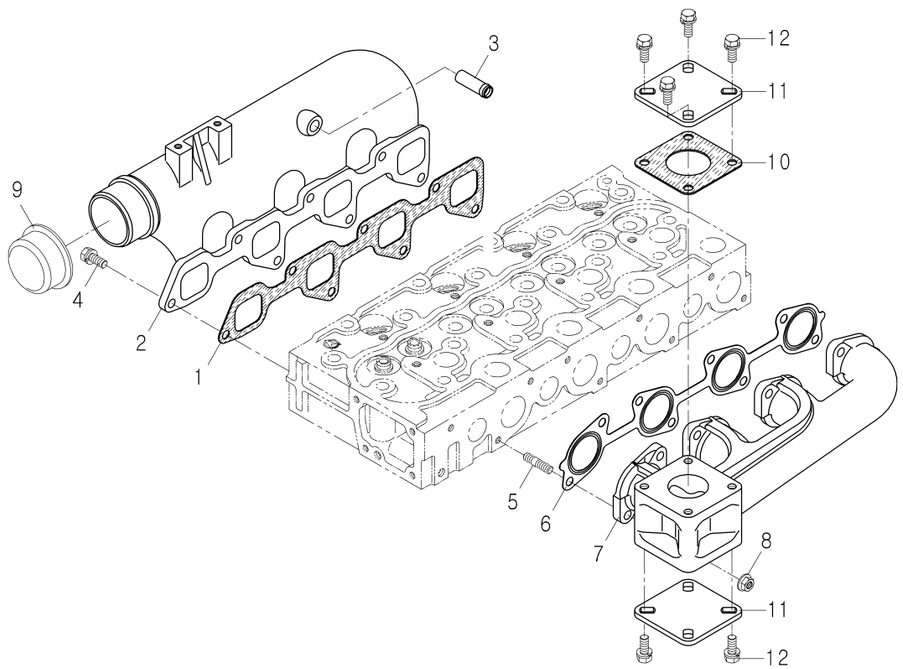

NOTE 4A220-DY

FIG 220	MANIFOLD GROUP	P1	Month / Year
4510C			01 / 2004

KEY NO.		PART NO.	DESCRIPTION	SPEC.	QTY.	REPAIR	E/G SERIAL NO.	REMARKS
220	001	E6301-11822	INTAKE MANIFOLD GASKET		1	B		
220	002	E6301-11764	INTAKE MANIFOLD		1	C		
220	003	E6510-05551	BREATHER PIPE CONNECTOR		1			
220	004	01123-50822	BOLT WITH WASHER		7			
220	005	01513-50822	STUD		8			
220	006	E6520-12351	EXHAUST MANIFOLD GASKET		1	B		
220	007	E6306-12311	EXHAUST MANIFOLD		1	C		
220	008	02751-50080	FLANGE NUT		8			
220	009	E6300-11912	INTAKE MANIFOLD COVER		1			
220	010	E5800-12371	MUFFLER GASKET		1			
220	011	E6306-12511	EXHAUST MANIFOLD COVER		2			
220	012	01123-50820	BOLT WITH WASHER		6			

NOTE 4A220-DY

FIG 240	OPTION GROUP	P1	Month/Year
4510C			01 / 2004

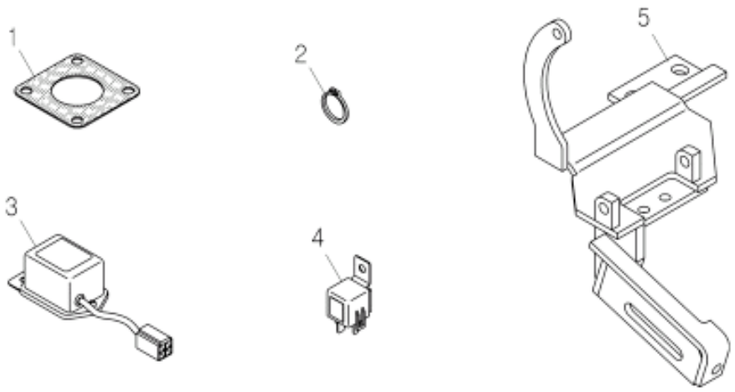

NOTE 4A220-DY

FIG 240	OPTION GROUP	P1	Month / Year
4510C			01 / 2004

KEY NO.		PART NO.	DESCRIPTION	SPEC.	QTY.	REPAIR	E/G SERIAL NO.	REMARKS
240	001	E5800-12371	MUFFLER GASKET		1	B		
240	002	15471-9536-1	SNAP RING		1	B		
240	003	15475-6024-2	TIMER RELAY		1	C		
240	004	C5510-43101	GLOW RELAY		1	C		
240	005	E5800-72316	COMPRESSOR BRACKRT		1			

NOTE 4A220-DY

FIG 022	AIR CLEANER	P1	Month/Year
4510C			06 / 2005

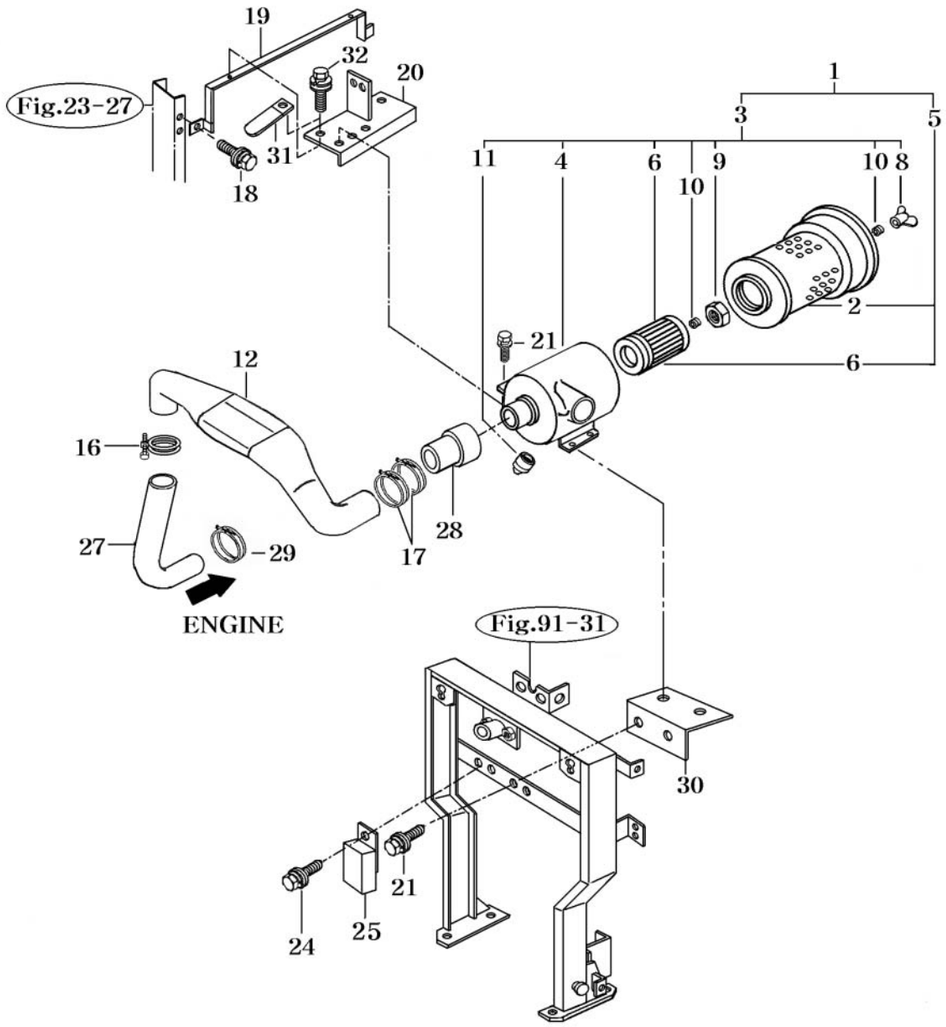

NOTE

FIG 022	AIR CLEANER	P1	Month / Year
4510C			06 / 2005

KEY NO.		PART NO.	DESCRIPTION	SPEC.	QTY.	REPAIR	EFFECTIVE DATE	REMARKS
022	001	16001032000	AIR CLEANER ASSY		1			
022	002	15541012221	ELEMENT COMP , OUT		1	A		
022	003	16001032100	BODY ASSY		1			
022	004	16001032300DG	BODY COMP		1			
022	005	15541000000	ELEMENT SET , AIR		1	A		
022	006	15541012230	ELEMENT ASSY , IN		1	A		
022	008	14221012381	NUT , WING		1			
022	009	14421012390	NUT		1			
022	010	14161010110	PACKING		2			
022	011	15241022521	VALVE		1			
022	012	14501030010	PIPE , INLET		1			
022	016	14321018620	CLAMP , 75		1			
022	017	14401010140	CLAMP , 82		2			
022	018	V2173608016	BOLT , HEX/S	M8X16	4			
022	019	16601032100DG	STAY COMP		1			
022	020	16001032200DG	PLATE COMP		1		~2005.09.08	
022	020	16001032201DG	PLATE COMP		1		2005.09.09~	
022	021	V2173608016	BOLT , HEX/S	M8X16	7			
022	024	V2193606016	BOLT , HEX/SPL	M6X16	1			
022	025	17686641110	RELAY , PREHEAT		1	C		
022	027	14511033000	HOSE , AIR INLET		1	C		
022	028	15641030022	GASKET		1	B		
022	029	15191010040	CLAMP , 70		1			
022	030	16001032500DG	BRACKET COMP , AIR CLEANER		1			
022	031	13764020030	BAND , 140		1			
022	032	V2193606016	BOLT , HEX/SPL	M6X16	1			

NOTE

FIG 023	RADIATOR	P1	Month/Year
4510C			06 / 2005

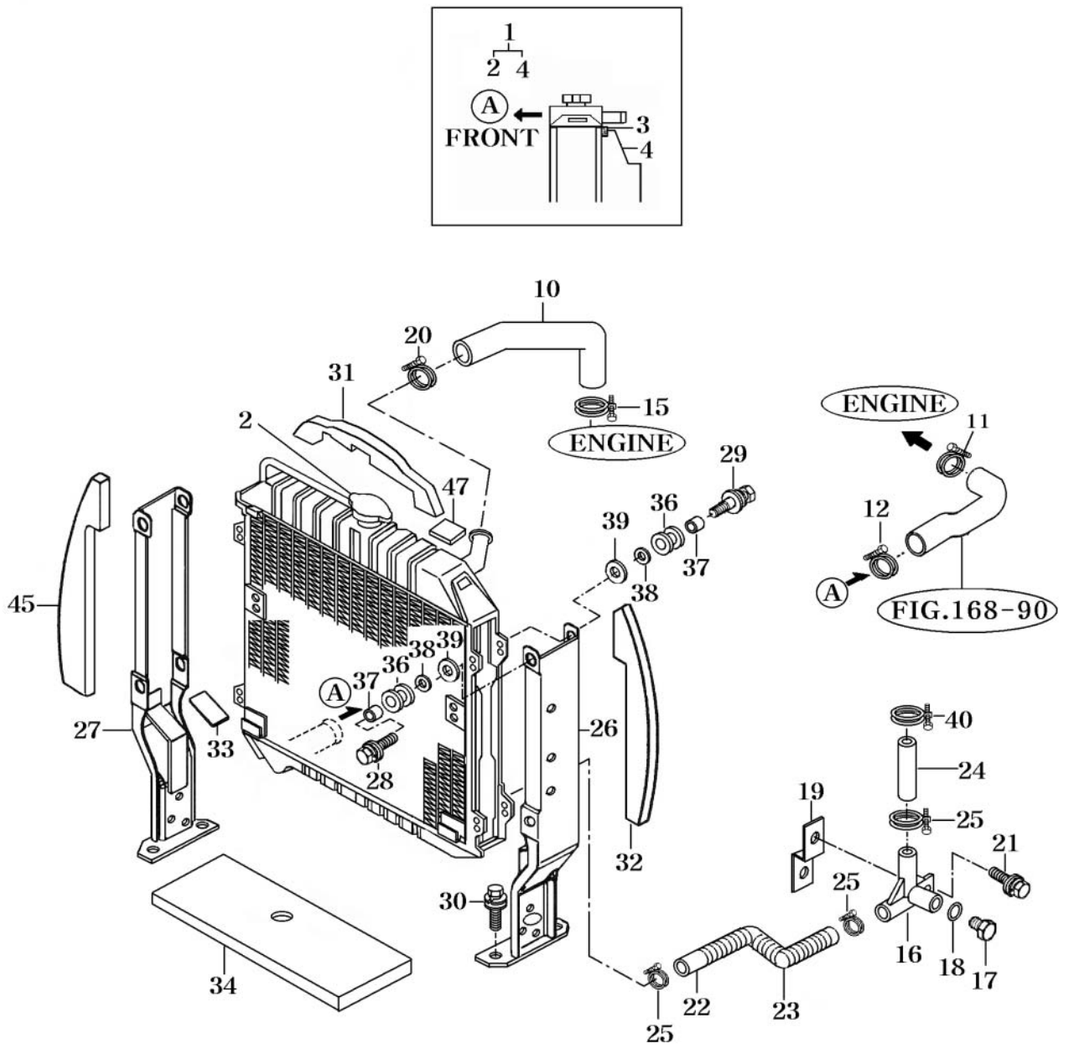

NOTE

FIG 023	RADIATOR	P1	Month / Year
4510C			06 / 2005

KEY NO.		PART NO.	DESCRIPTION	SPEC.	QTY.	REPAIR	EFFECTIVE DATE	REMARKS
023	001	14611042102	RADIATOR ASSY		1			
023	002	16601042160	CAP ASSY		1			
023	003	16601042340	SPONGE , 495		2			
023	004	16001042202	SHROUD COMP		1			
023	010	16001040020	HOSE , RADIATOR		1	C		
023	011	14241010040	CLIP , 45		1			
023	012	15641040180	CLAMP , 48		1			
023	015	14241010040	CLIP , 45		1			
023	016	15601040104	CONNECTOR		1			
023	017	16991113131	PLUG		1		~2006.03.02	
023	017	16991113132	PLUG		1		2006.03.03~	
023	018	V7201019008	O-RING , P	P8	1	B	~2006.03.02	
023	019	14504313301DG	PLATE COMP		1			
023	020	14241010050	CLIP , 42		1			
023	021	V2183608020	BOLT , HEX/SP	M8X20	1			
023	022	15231040150	HOSE , 380		1	C		
023	023	15081020070	TUBE , CORRUGATE 250		1			
023	024	16731040130	HOSE , RADIATOR		1	C		
023	025	14171020050	BAND , HOSE		3			
023	026	16991142003DG	BRACKET COMP , LH		1			
023	027	16991042103DG	BRACKET COMP , RH		1			
023	028	V2193606025	BOLT , HEX/SPL	M6X25	4			
023	029	V2173608030	BOLT , HEX/S	M8X30	4			
023	030	V2183608025	BOLT , HEX/SP	M8X25	4			
023	031	16001040130	INSULATOR , HOOD		1			
023	032	16791040050	INSULATOR , LH		1			
023	033	15641040160	INSULATOR		2			
023	034	16071040031	INSULATOR		1			
023	036	14046210300	GROMMET		8			
023	037	15991040050	COLLAR , 08X12X08		8			
023	038	35652030040	COLLAR , PACKER SHAFT		8			
023	039	35602010150	WASHER , BIND SHAFT		8			
023	040	16601850160	BAND , 20		1			
023	045	16791040060	INSULATOR , RH		1			
023	047	16991040020	INSULATOR , RADIATOR		1			

NOTE

FIG 024 4510C	MUFFLER	P1	Month/Year 06 / 2005

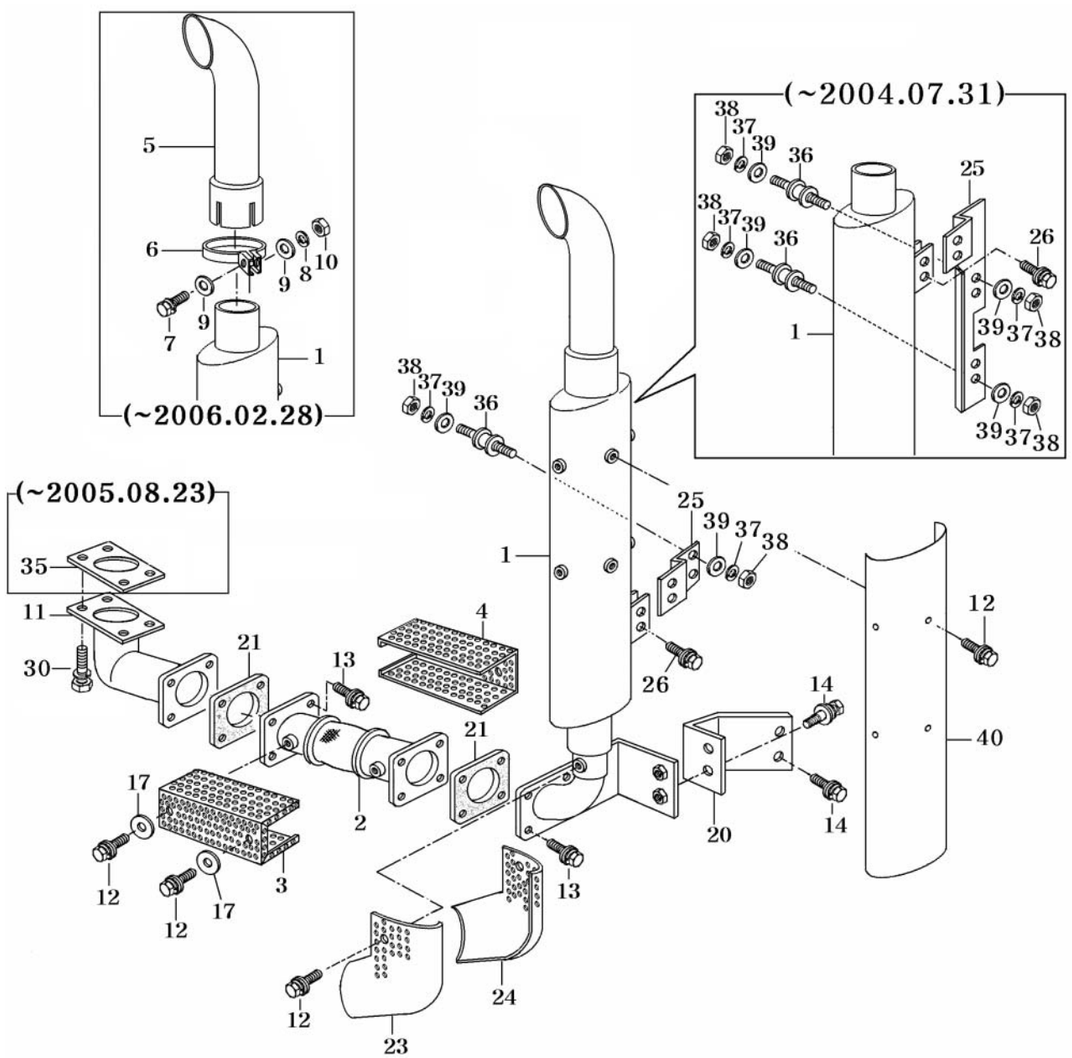

NOTE

FIG 024 4510C	MUFFLER	P1	Month / Year 06 / 2005

KEY NO.		PART NO.	DESCRIPTION	SPEC.	QTY.	REPAIR	EFFECTIVE DATE	REMARKS
024	001	16791132005	MUFFLER COMP		1		~2004.07.31	
024	001	16791132006	MUFFLER COMP		1		~2006.02.28	
024	001	16791132007	MUFFLER COMP		1		2006.03.01~	
024	002	16791054503	PIPE COMP , FLEXIBLE		1			
024	003	16791054212DD	COVER , FR		1			
024	004	16791054222DD	COVER , RR		1			
024	005	16991052402	PIPE , UPR TAIL		1		~2006.02.28	
024	006	16601014400	CLAMP		1		~2006.02.28	
024	007	V2013610065	BOLT , HEX	M10X65	1		~2006.02.28	
024	008	V4011600100	WASHER , SPRING	M10	1		~2006.02.28	
024	009	V4111600100	WASHER , PLAIN	M10	2		~2006.02.28	
024	010	V3042600100	NUT , HEX/2	M10	1		~2006.02.28	
024	011	16001051991DD	PIPE , EXHAUST		1			
024	012	V2123806012	BOLT . HEX /SP	M6X12	7		~2004.07.31	
024	012	V2123806012	BOLT . HEX /SP	M6X12	13		2004.08.01~	
024	013	V2183808025	BOLT , HEX/SP	M8X25	8			
024	014	V2183610025	BOLT , HEX/SP	M10X25	4			
024	017	16002010150	WASHER		4			
024	020	16791054101DG	BRACKET , EXHAUST PIPE		1			
024	021	16991054320	GASKET , FLEXIBLE		2			
024	023	16791054312	COVER , EXHAUST PIPE		1			
024	024	16791052432	COVER , EXHAUST PIPE		1			
024	025	16791054392DG	BRACKET COMP , UPR M		1		~2004.07.31	
024	025	14511130010DG	PLATE		1		2004.08.01~	
024	026	V2183808025	BOLT , HEX/SP	M8X25	4			
024	030	V2173608025	BOLT , HEX/S	M8X25	2			
024	035	15001030010	GASKET		1	B	~2005.08.23	
024	036	37371560090	RUBBER		4		~2004.07.31	
024	036	37371560090	RUBBER		2		2004.08.01~	
024	037	V4011600060	WASHER , SPRING	M6	8		~2004.07.31	
024	037	V4011600060	WASHER , SPRING	M6	4		2004.08.01~	
024	038	V3002600060	NUT , HEX/1	M6	8		~2004.07.31	
024	038	V3002600060	NUT , HEX/1	M6	4		2004.08.01~	
024	039	V4111600060	WASHER , PLAIN	M6	8		~2004.07.31	
024	039	V4111600060	WASHER , PLAIN	M6	4		2004.08.01~	
024	040	16791054600DD	COVER		1		2004.08.01~	

NOTE

FIG 025	FUEL TANK	P1	Month/Year
4510C			06 / 2005

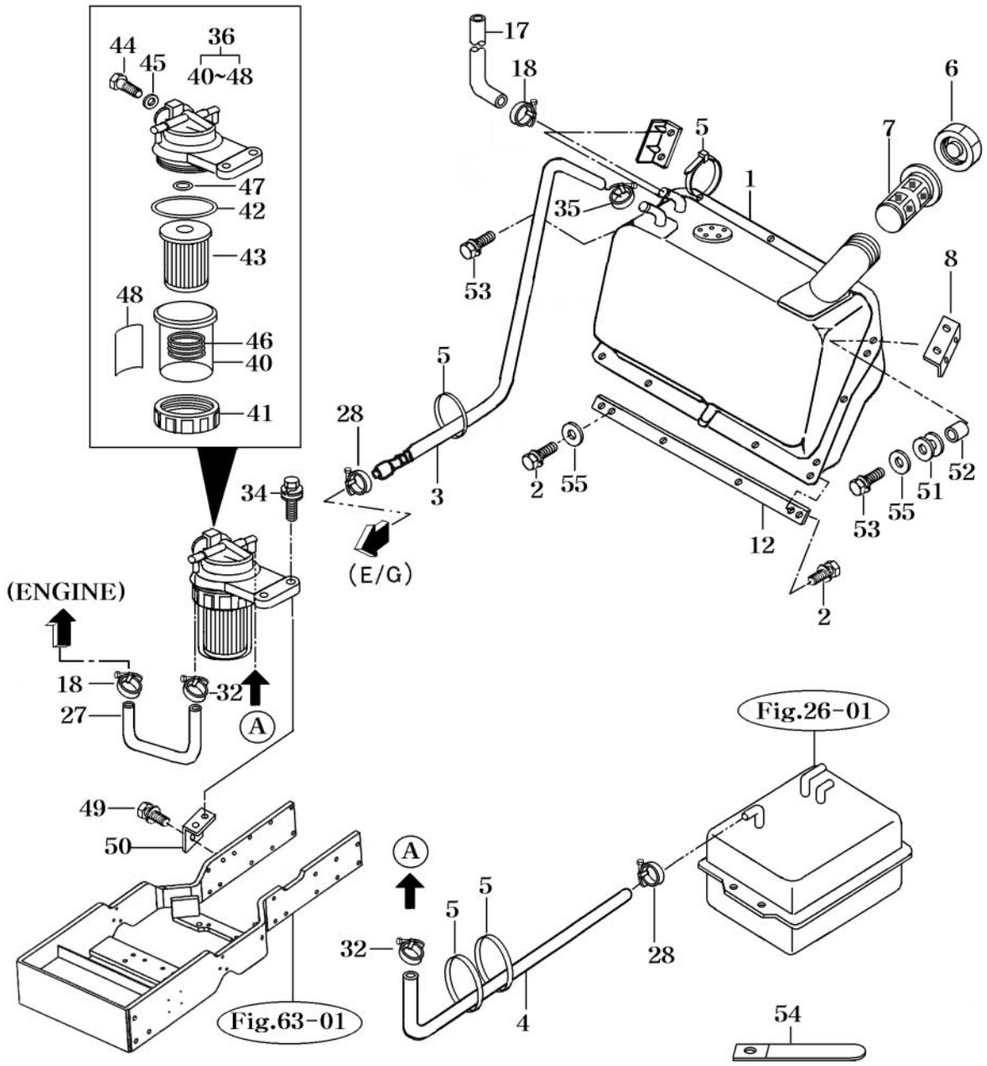

NOTE

FIG 025	FUEL TANK	P1	Month / Year
4510C			06 / 2005

KEY NO.		PART NO.	DESCRIPTION	SPEC.	QTY.	REPAIR	EFFECTIVE DATE	REMARKS
025	001	17991112002	TANK COMP , FUEL MAIN		1			
025	002	V2183608020	BOLT , HEX/SP	M8X20	8			
025	003	16001112201	HOSE , 2550		1	C		
025	004	14621113202	HOSE , 1200		1	C	~2005.11.29	
025	004	16991024100	HOSE , 1200		1	C	2005.11.30~	
025	005	13424020060	BAND , 250		5			
025	006	36523102201	CAP ASSY , TANK		1			
025	007	14481112300	FILTER		1			
025	008	17997026900DG	BRACKET COMP		2			
025	012	17997010601DG	PLATE COMP , LOW FUEL		1			
025	017	16791020020	HOSE , 470		1			
025	018	14501410050	CLAMP , WORM 14.5		2			
025	027	14611113100	HOSE , FUEL 330		1	C		
025	028	14501410050	CLAMP , WORM 14.5		2			
025	032	37481850030	BAND , HOSE 18.5		2			
025	034	V2183608025	BOLT , HEX/SP	M8X25	2			
025	035	14501410050	CLAMP , WORM 14.5		1			
025	036	36573112000	FILTER ASSY		1	C		
025	040	15131023270	CUP		1			
025	041	14261602070	NUT , RING		1			
025	042	V7211031065	O-RING , G	G65	1			
025	043	15131023290	ELEMENT		1	A		
025	044	14151020120	PLUG		2			
025	045	14151020130	PACKING		2			
025	046	14261602090	SPRING		1			
025	047	V7201024016	O-RING , P	P16	1	B		
025	048	15131023320	LABEL , CAUTION		1			
025	049	V2173608020	BOLT , HEX/S	M8X20	2			
025	050	14611113000DG	BRACKET COMP , FUEL		1			
025	051	14046210300	GROMMET		4			
025	052	15991040050	COLLAR , 08X12X08		4			
025	053	V2173608025	BOLT , HEX/S	M8X25	8			
025	054	37371720090	CLAMP , W/HARNESS		2			
025	055	35602010150	WASHER , BIND SHAFT		8			

NOTE

FIG 026 4510C	SUB FUEL TANK	P1	Month/Year 06 / 2005

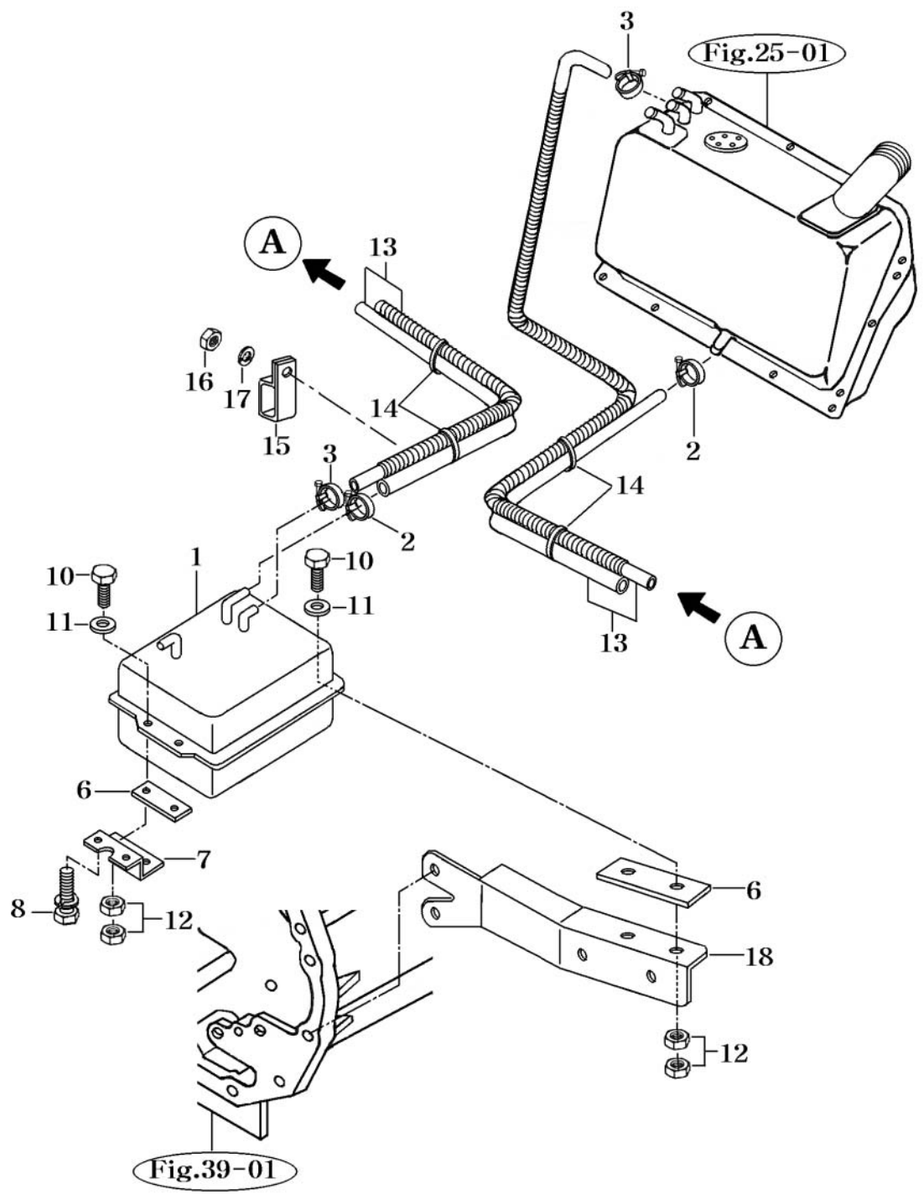

NOTE

FIG 026 4510C	SUB FUEL TANK	P1	Month / Year 06 / 2005

KEY NO.		PART NO.	DESCRIPTION	SPEC.	QTY.	REPAIR	EFFECTIVE DATE	REMARKS
026	001	16001113100DG	TANK COMP , FUEL SUB		1			
026	002	15585060110	CLIP , 28		2			
026	003	14501410050	CLAMP , WORM 14.5		2			
026	006	15681110032	INSULATOR		2			
026	007	15641113702DG	BRACKET COMP , FR SUB		1			
026	008	V2173608016	BOLT , HEX/S	M8X16	2			
026	010	V2013608025	BOLT , HEX	M8X25	4			
026	011	V4111600080	WASHER , PLAIN	M8	4			
026	012	V3042600080	NUT , HEX/2	M8	8			
026	013	15641113601	HOSE ASSY , FUEL		1	C		
026	014	13764020030	BAND , 140		2			
026	015	15251020040	CLAMP , RADIATOR HOSE		2			
026	016	V3002600060	NUT , HEX/1	M6	2			
026	017	V4011600060	WASHER , SPRING	M6	2			
026	018	14621112700DG	STAY COMP		1			

NOTE

FIG 027 4510C	ACCELERATOR	P1	Month/Year 06 / 2005

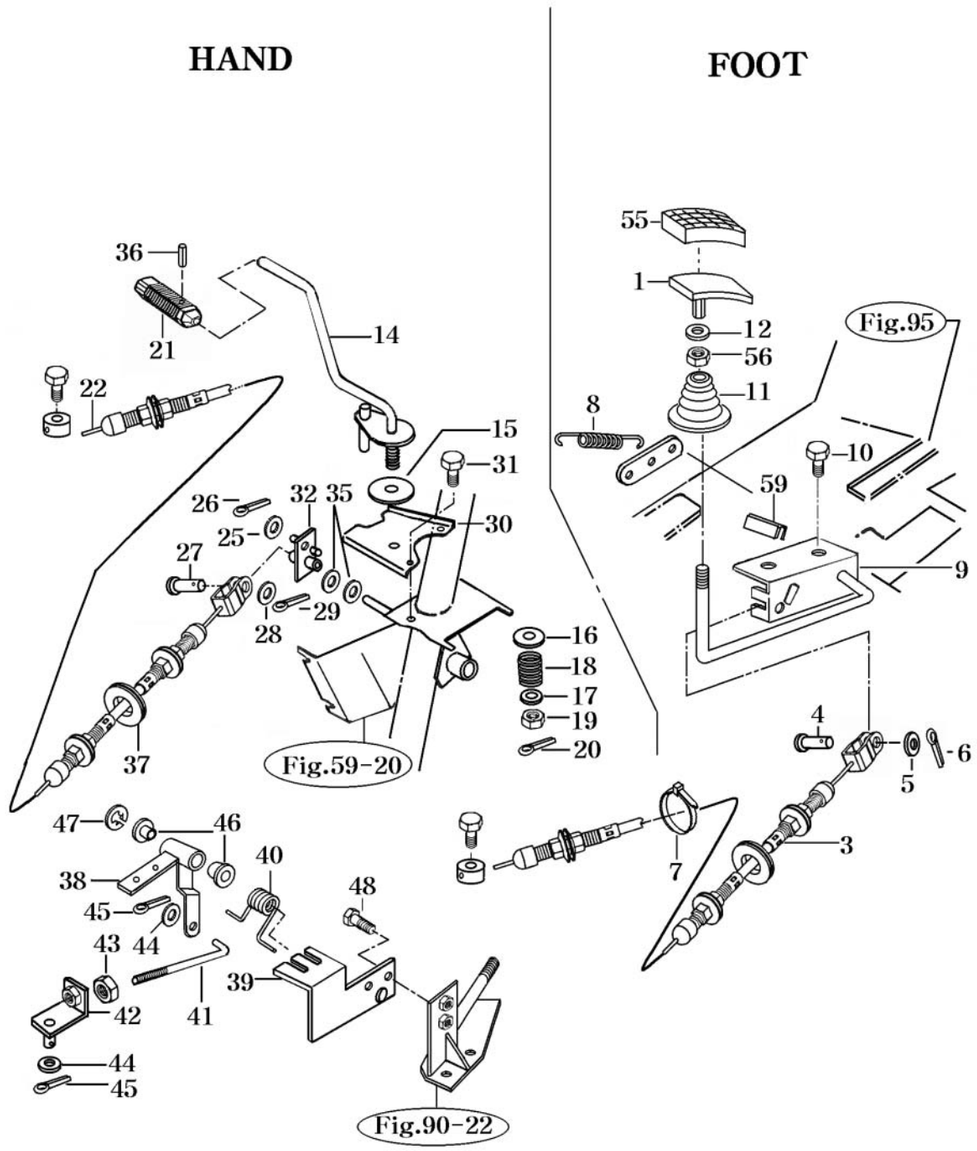

NOTE

FIG 027 4510C	ACCELERATOR	P1	Month / Year 06 / 2005

KEY NO.		PART NO.	DESCRIPTION	SPEC.	QTY.	REPAIR	EFFECTIVE DATE	REMARKS
027	001	16001220000DG	PLATE COMP , ACCELER		1			
027	003	16001162101	CABLE ASSY , ACCELERATOR		1	C		
027	004	15601160083	PIN , 06X16		1			
027	005	V4111600060	WASHER , PLAIN	M6	1			
027	006	V5001920020	PIN , SPLIT	2X20	1			
027	007	13424020060	BAND , 250		1			
027	008	36502200050	SPRING , FOOT PEDAL		1			
027	009	16791162004DG	BRACKET COMP		1			
027	010	V2173608020	BOLT , HEX/S	M8X20	3			
027	011	16991160010	BOOT , ACCELERATOR PEDAL		1			
027	012	V4111600080	WASHER , PLAIN	M8	1			
027	014	15601162506DG	LEVER COMP , BAR 10		1			
027	015	14141170050	LINING , 13X50X3		1			
027	016	36104400180	WASHER		1			
027	017	V4111600100	WASHER , PLAIN	M10	1			
027	018	14041170080	SPRING , COMPRESSION	D=5	1			
027	019	V3232600100	NUT , HEX SLOT & CASTLE	M10	1			
027	020	V5001925020	PIN , SPLIT	2.5X20	1			
027	021	15441170051	GRIP , 10X115		1			
027	022	14601162300	CABLE ASSY , THROTTLE		1	C		
027	025	V4111600100	WASHER , PLAIN	M10	1			
027	026	V5001920020	PIN , SPLIT	2X20	1			
027	027	15601160083	PIN , 06X16		1			
027	028	V4111600060	WASHER , PLAIN	M6	1			
027	029	V5001920020	PIN , SPLIT	2X20	1			
027	030	15641160013	GUIDE		1			
027	031	V2173608016	BOLT , HEX/S	M8X16	2			
027	032	15601162305DG	ARM , PLATE 25X59		1			
027	035	13651210050	WASHER , 10X20X2		2			
027	036	V5801403016	PIN , SPRING	3X16	1			
027	037	14326510210	CAP , RUBBER 20		1			
027	038	14611162100DG	ARM COMP , THROTTLE		1			
027	039	14611162000DG	BRACKET COMP		1			
027	040	14601162230	SPRING		1			
027	041	14601160011	ROD , THROTTLE		1			
027	042	14601162200	PLATE COMP		1			
027	043	V3042600080	NUT , HEX/2	M8	1			
027	044	V4111600080	WASHER , PLAIN	M8	2			
027	045	21306010180	PIN , SNAP(6)		2			
027	046	15645120010	BUSH , 10X18X10		2			
027	047	V7081400090	E-RING	9	1			
027	048	V2173608020	BOLT , HEX/S	M8X20	2			
027	055	16791220010	PAD		1			
027	056	V3042600080	NUT , HEX/2	M8	1			
027	059	16997021960	INSULATOR , 32		1			

NOTE

FIG 029 4510C	CLUTCH	P1	Month/Year 06 / 2005

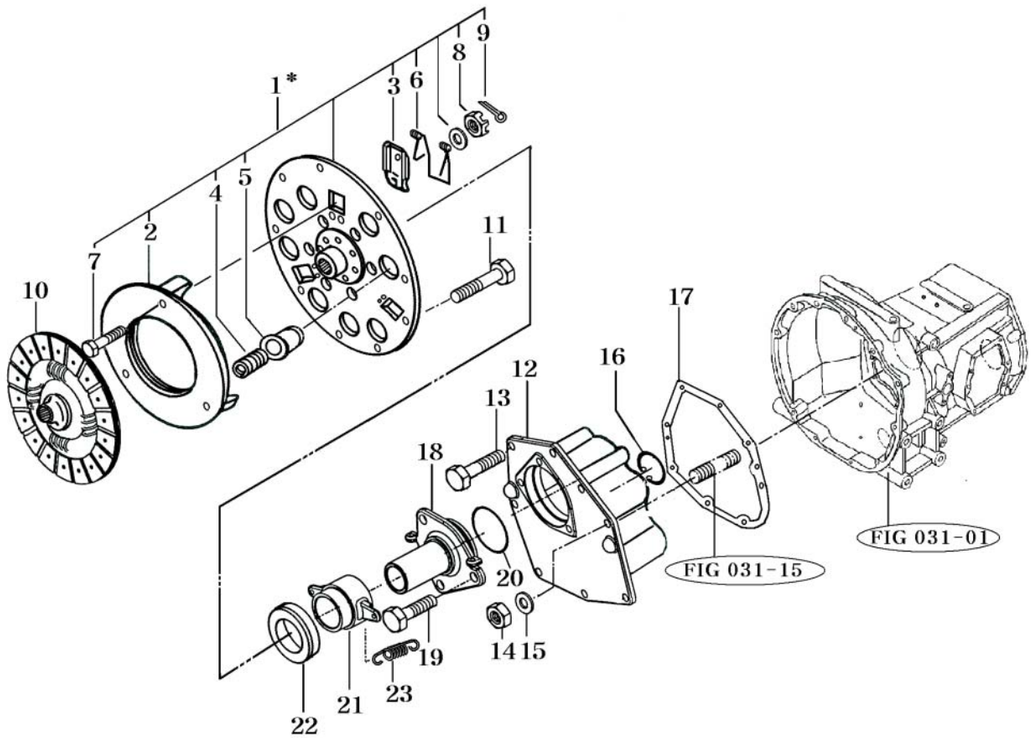

* NOT SERVICED SEPARATELY

NOTE

FIG 029 4510C	CLUTCH	P1	Month / Year 06 / 2005

KEY NO.		PART NO.	DESCRIPTION	SPEC.	QTY.	REPAIR	EFFECTIVE DATE	REMARKS
029	001	16601212002	COVER ASSY , CLUTCH		1	C		
029	002	16441202020	PLATE		1			
029	003	16441202030	LEVER , RELEASE		3			
029	004	16441202040	SPRING , COMPRESSION		9			
029	005	14321202140	CAP , SPRING		9			
029	006	16441202050	SPRING , RETURN		3			
029	007	16341202130	BOLT , LEVER		3			
029	008	14321202171	NUT , LEVER		3			
029	009	V5001920020	PIN , SPLIT	2X20	3			
029	010	16441202101	DISK COMP , CLUTCH 260		1	B		
029	011	V2173608020	BOLT , HEX/S	M8X20	9			
029	012	16501210010M	METAL . INPUT		1			
029	013	16604610020	BOLT , SEAL		7			
029	014	V3043600100	NUT , HEX/2	M10	1			
029	015	V4011600100	WASHER , SPRING	M10	1			
029	016	V7051400620	C-RING , HOLE	62	1			
029	017	16601200030	GASKET		1	B		
029	018	16601210020M	METAL , SLEEVE		1			
029	019	16604610020	BOLT , SEAL		3			
029	020	16501210050	O-RING , G70		1	B		
029	021	16341200020M	SLEEVE		1			
029	022	14151200040	BEARING , CLUTCH RELEASE		1	C		
029	023	14321200040	SPRING , TENSION 31		2			

NOTE

FIG 030	CLUTCH PEDAL	P1	Month/Year
4510C			06 / 2005

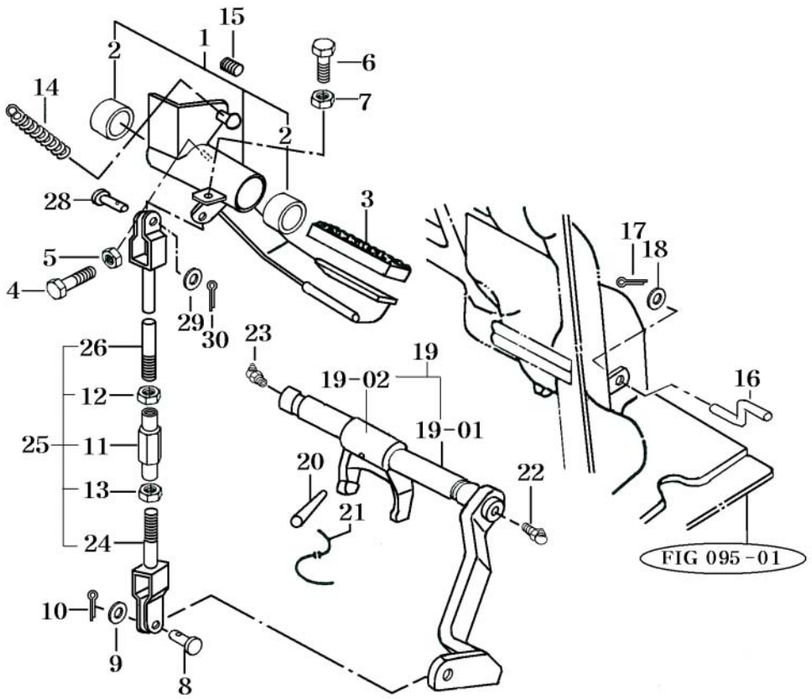

NOTE

FIG 030	CLUTCH PEDAL	P1	Month / Year
4510C			06 / 2005

KEY NO.		PART NO.	DESCRIPTION	SPEC.	QTY.	REPAIR	EFFECTIVE DATE	REMARKS
030	001	16341322000	PEDAL ASSY , CLUTCH		1			
030	002	15641320020	BUSH , 30X34X20		2			
030	003	15241220010	PAD		1	C		
030	004	V2013608030	BOLT , HEX	M8X30	1			
030	005	V3042600080	NUT , HEX/2	M8	1			
030	006	V2013608025	BOLT , HEX	M8X25	1			
030	007	V3042600080	NUT , HEX/2	M8	1			
030	008	14322420010	PIN		1			
030	009	V4111600080	WASHER , PLAIN	M8	1			
030	010	V5001925020	PIN , SPLIT	2.5X20	1			
030	011	16601220020	TURNBUCKLE , M8 L60		1			
030	012	15601320073	NUT , HEX LH		1			
030	013	V3042600080	NUT , HEX/2	M8	1			
030	014	16001200080	RETURN SPRING , CLUTCH		1			
030	015	15601320011	TUBE , CORRUGATE 1050		1			
030	016	15441230050	ROD		1			
030	017	V5001920020	PIN , SPLIT	2X20	1			
030	018	V4111600060	WASHER , PLAIN	M6	1			
030	019	16601302000	BAR SET		1			
030	01901	15651302105	BAR COMP		1			
030	01902	16601302010	FORK , RELEASE		1			
030	020	15601300010	PIN , 08X40		1			
030	021	V5901012150	WIRE , STEEL	1.2X150	1			
030	022	V7631500000	NIPPLE , GREASE/B-PT	B-PT1/8	1			
030	023	V7641500000	NIPPLE , GREASE/C-PT	C-PT1/8	1			
030	024	15681322000	ROD COMP		1			
030	025	16601220000	ROD COMP . FORK		1			
030	026	15681322102	ROD COMP		1			
030	028	14322420010	PIN		1			
030	029	V4111600080	WASHER , PLAIN	M8	1			
030	030	V5001925020	PIN , SPLIT	2.5X20	1			

NOTE

FIG 031	TRANSMISSION FRONT CASE	P1	Month/Year
4510C			06 / 2005

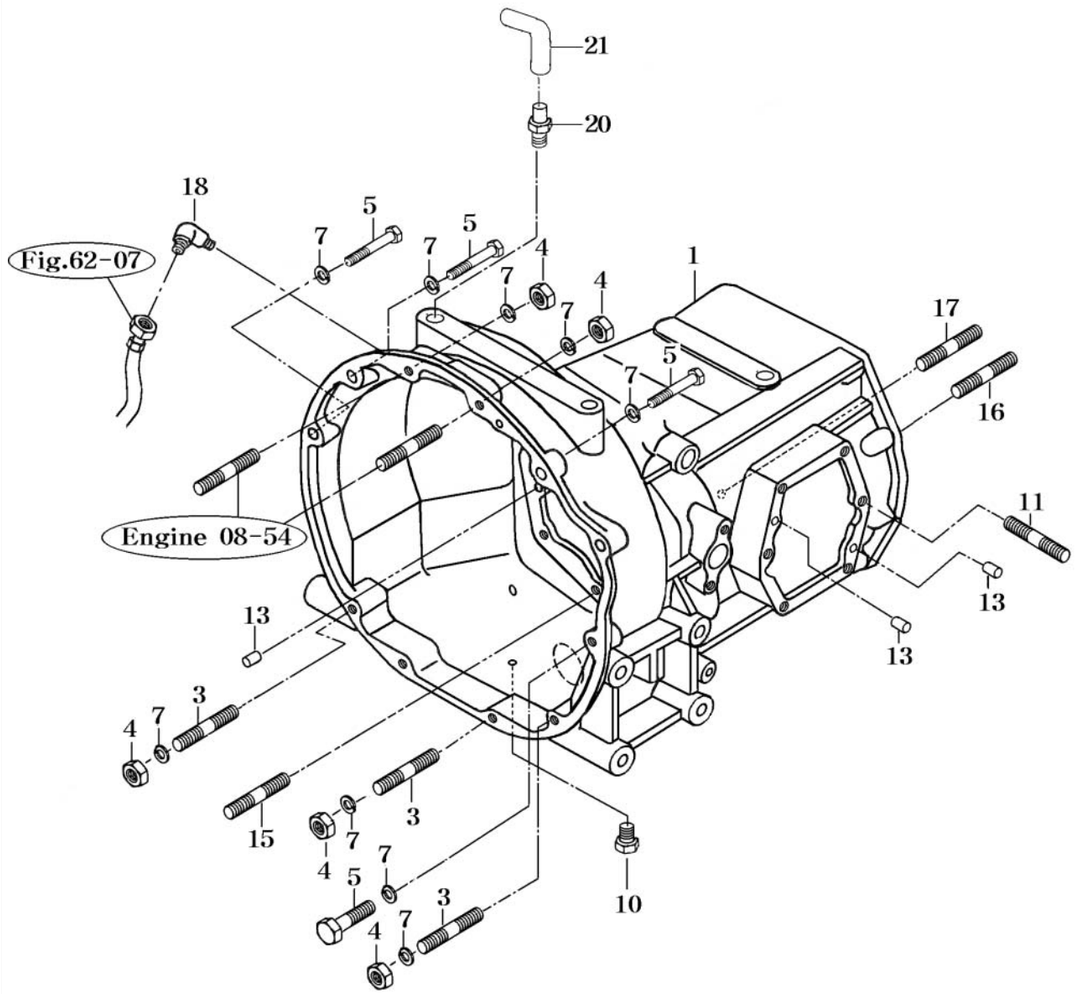

NOTE

FIG 031	TRANSMISSION FRONT CASE	P1	Month / Year
4510C			06 / 2005

KEY NO.		PART NO.	DESCRIPTION	SPEC.	QTY.	REPAIR	EFFECTIVE DATE	REMARKS
031	001	14502010013M	CASE , FR TRANSMISSION		1			
031	003	16733412032	BOLT , STUD		3			
031	004	V3343600120	NUT , HEX FINE/2	M12	5			
031	005	V2013612045	BOLT , HEX	M12X45	5			
031	007	V4011600120	WASHER , SPRING	M12	10			
031	010	12507060020	PLUG , DRAIN		1			
031	011	V2513408020	BOLT , STUD/2	M8X20	2			
031	013	V5201010022	PIN , PARALLEL/A	10X22	6			
031	015	V2514410025	BOLT , STUD/2	M10X25	1			
031	016	V2513412035	BOLT , STUD/2	M12X35	1			
031	017	V2513412045	BOLT , STUD/2	M12X45	1			
031	018	16751850222	ELBOW , 90 PT3/8	PT3/8,PF3/8	1			
031	020	16992011110	CONNECTOR		1			
031	021	15134080020	HOSE , OIL		1			

NOTE

FIG 032	INPUT & COUNTER GEARS	P1	Month/Year
4510C			06 / 2005

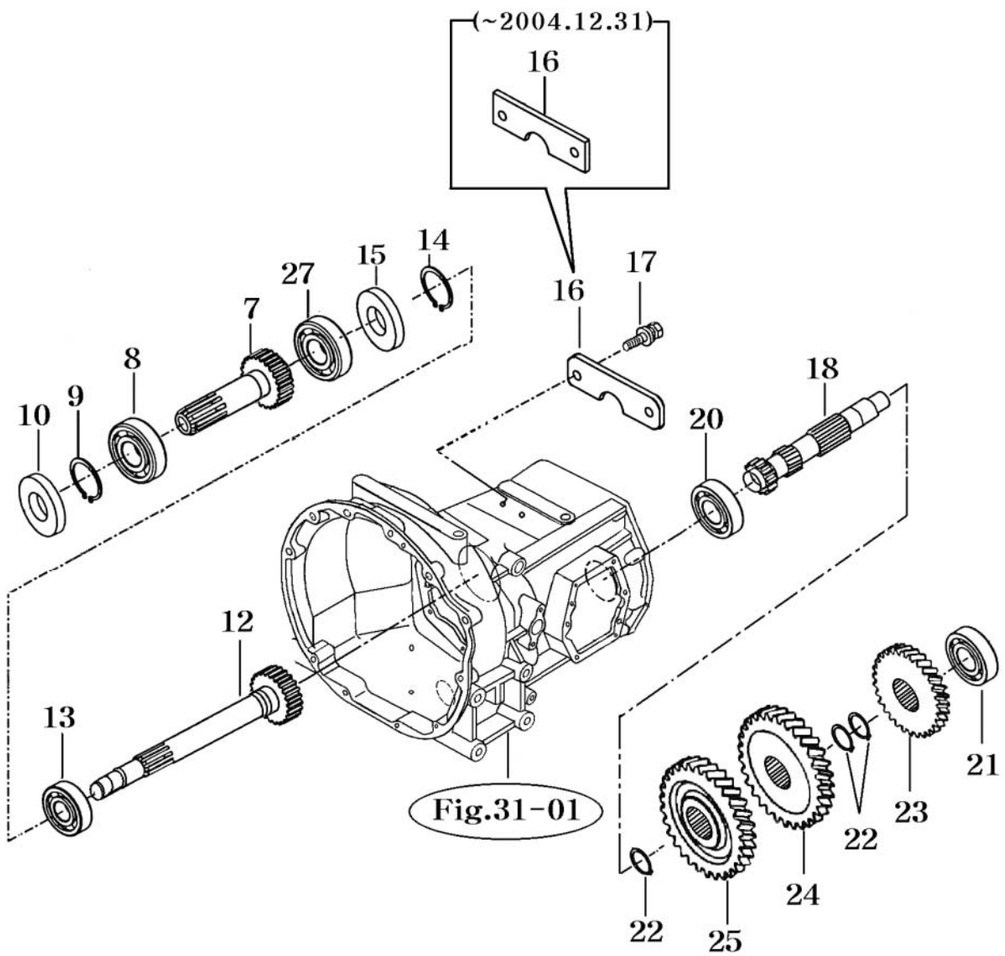

NOTE

FIG 032	INPUT & COUNTER GEARS	P1	Month / Year
4510C			06 / 2005

KEY NO.		PART NO.	DESCRIPTION	SPEC.	QTY.	REPAIR	EFFECTIVE DATE	REMARKS
032	007	16502070110	GEAR . HELICAL 21T		1			
032	008	V6041106207	BEARING , BALL/HL1	6207HL1	1			
032	009	V7041400350	C-RING , SHAFT	35	1			
032	010	16502070020	SEAL , OIL D		1	B		
032	012	16502070120	GEAR . HELICAL 21T		1			
032	013	V6041106206	BEARING , BALL/HL1	6206HL1	1			
032	014	V7041400300	C-RING , SHAFT	30	1			
032	015	17991304510	SEAL , OIL D		1	B		
032	016	15602060023	PLATE , 25X90		1		~2004.12.31	
032	016	15602060024	PLATE , 25X90		1		2005.01.01~	
032	017	V2173608016	BOLT , HEX/S	M8X16	2			
032	018	15662130012	GEAR , HELICAL 19T		1			
032	020	V6001106207	BEARING , BALL	6207	1			
032	021	V6041106206	BEARING , BALL/HL1	6206HL1	1			
032	022	V7041400350	C-RING , SHAFT	35	3			
032	023	15642120031	GEAR , HELICAL 24T		1			
032	024	15662130021	GEAR , HELICAL 28T		1			
032	025	15662130031	GEAR , HELICAL 32T		1			
032	027	V6001106909	BEARING , BALL	6909	1			

NOTE

FIG 033 4510C	MAIN CHANGE GEARS	P1	Month/Year 06 / 2005

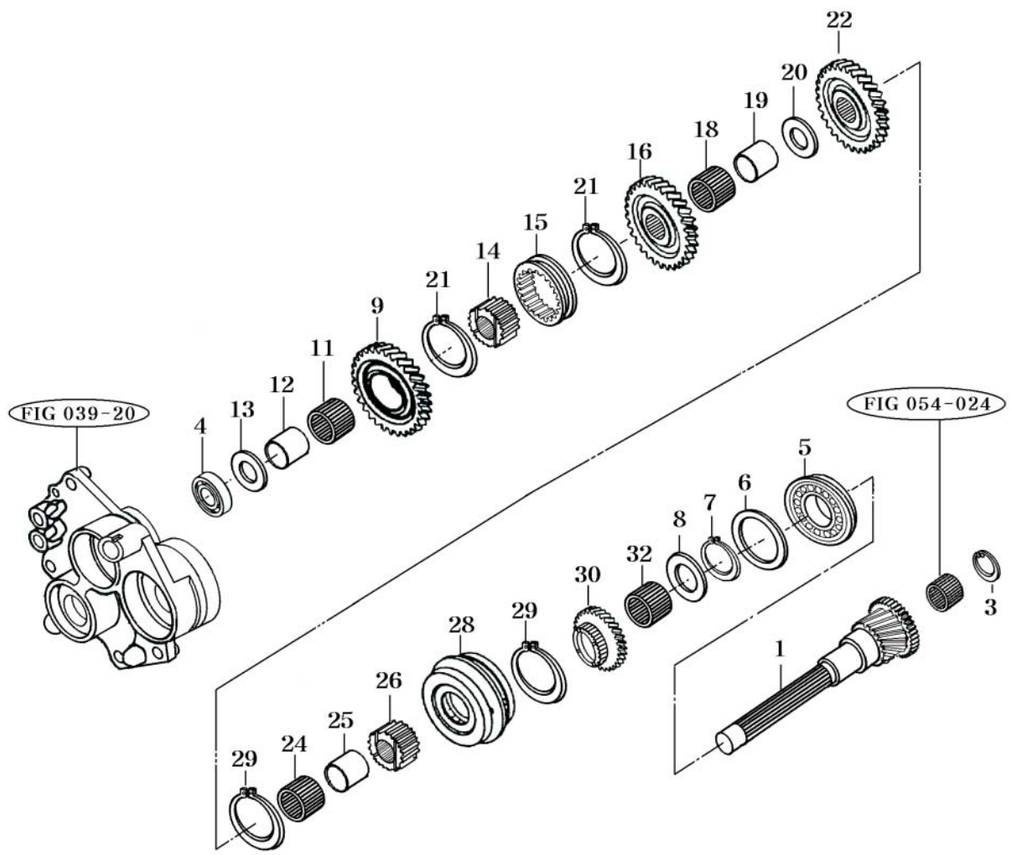

NOTE

FIG 033 4510C		P1	Month / Year 06 / 2005

KEY NO.		PART NO.	DESCRIPTION	SPEC.	QTY.	REPAIR	EFFECTIVE DATE	REMARKS
033	001	15642080015	GEAR , HELICAL 14T		1			
033	003	15642080080	SNAP RING , C TYPE		1			
033	004	V6001106305	BEARING , BALL	6305	1			
033	005	V6001606307	BEARING , BALL	6307N	1			
033	006	14443140041	COLLAR , 35X50X2		1			
033	007	V7041400350	C-RING , SHAFT	35	1			
033	008	15642160041	WASHER , 30X46X3		1			
033	009	15662090013	GEAR , HELICAL 40T		1			
033	011	V6544323723	BEARING , NEEDLE.ROLLER	KT323723	1			
033	012	15602080093	BUSH , 28X32X31		1			
033	013	15642080090	WASHER , 25X46X5		1			
033	014	15682090020	HUB , 28X51X21		1			
033	015	15602080224	COUPLING , 51X72X18		1			
033	016	15642080062	GEAR , HELICAL 36T		1			
033	018	V6544323723	BEARING , NEEDLE.ROLLER	KT323723	1			
033	019	15602080093	BUSH , 28X32X31		1			
033	020	15642080022	WASHER , 28X46X5		1			
033	021	V7041400500	C-RING , SHAFT	50	2			
033	022	15662090022	GEAR , HELICAL 31T		1			
033	024	V6544323723	BEARING , NEEDLE.ROLLER	KT323723	1			
033	025	15602080093	BUSH , 28X32X31		1			
033	026	15682090020	HUB , 28X51X21		1			
033	028	16492092001	SYNCHRONIZER ASSY		1	C		
033	029	V7041400500	C-RING , SHAFT	50	2			
033	030	15662090032	GEAR , HELICAL 27T		1			
033	032	V6544303524	BEARING , NEEDLE.ROLLER	KT303524	1			

NOTE

FIG 034	REVERSE GEARS	P1	Month/Year
4510C			06 / 2005

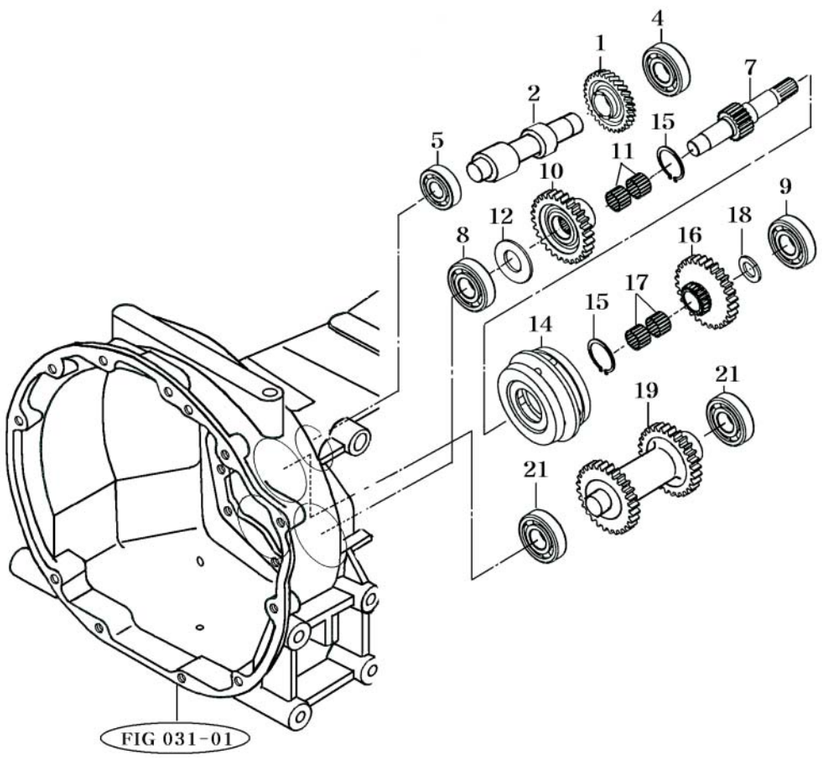

NOTE

FIG 034	REVERSE GEARS	P1	Month / Year
4510C			06 / 2005

KEY NO.		PART NO.	DESCRIPTION	SPEC.	QTY.	REPAIR	EFFECTIVE DATE	REMARKS
034	001	15642140011	GEAR , HELICAL 30T		1			
034	002	15642140023	SHAFT		1			
034	004	V6001106305	BEARING , BALL	6305	1			
034	005	V6001106004	BEARING , BALL	6004	1			
034	007	15642170012	SHAFT , REVERSE		1			
034	008	V6001106305	BEARING , BALL	6305	1			
034	009	V6001106306	BEARING , BALL	6306	1			
034	010	15642160022	GEAR , HELICAL 26T		1			
034	011	V6544323717	BEARING , NEEDLE.ROLLER	KT323717	2			
034	012	15602160083	WASHER , 25X46X3		1			
034	014	16492092001	SYNCHRONIZER ASSY		1	C		
034	015	V7041400500	C-RING , SHAFT	50	2			
034	016	15642160032	GEAR , HELICAL 25T		1			
034	017	V6544323717	BEARING , NEEDLE.ROLLER	KT323717	2			
034	018	15642160041	WASHER , 30X46X3		1			
034	019	15992180010	GEAR , HELICAL 33-29T		1			
034	021	15972180010	BEARING , BALL		2			

NOTE

FIG 036	P.T.O DRIVE SHAFT	P1	Month/Year
4510C			06 / 2005

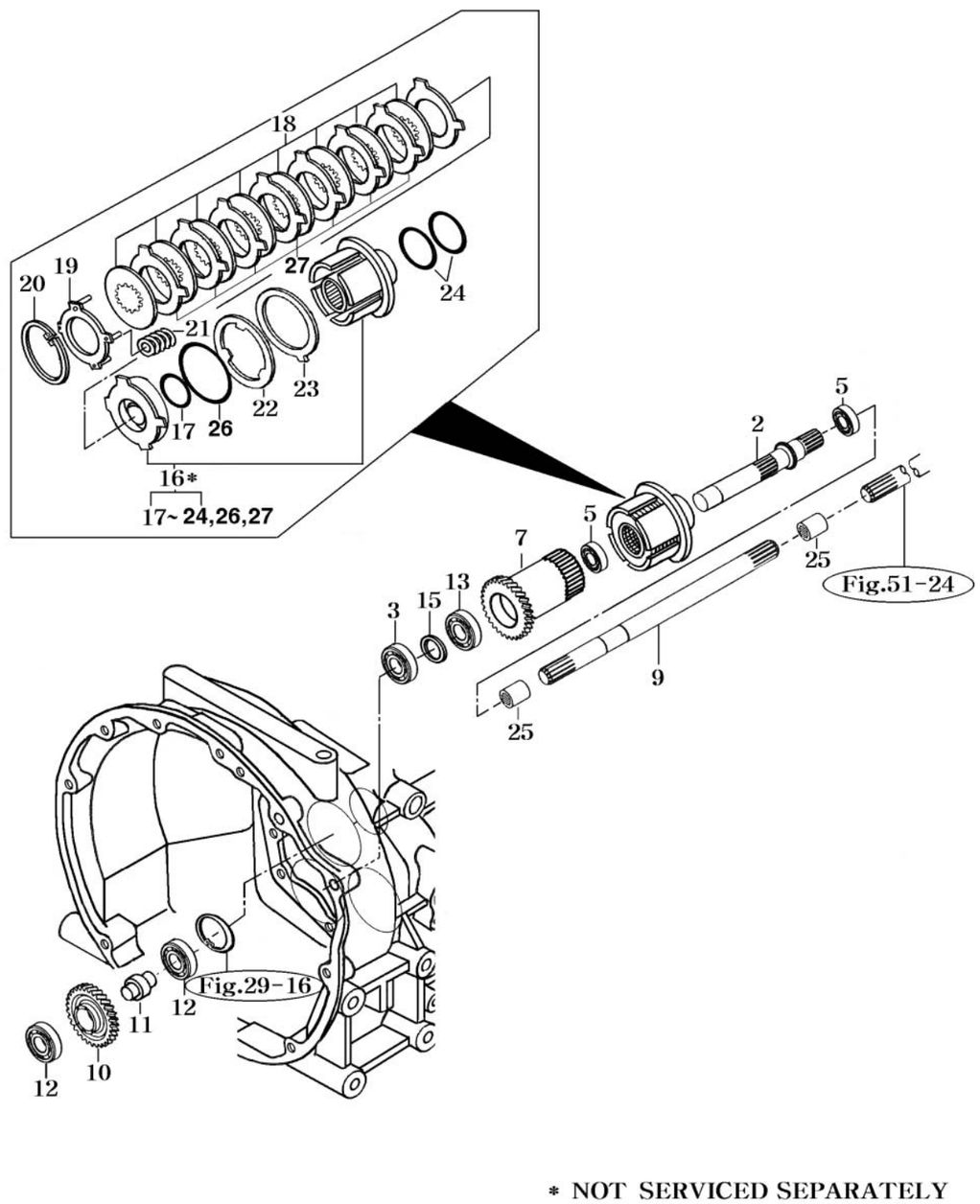

NOTE

FIG 036		P1	Month / Year
4510C			06 / 2005

KEY NO.		PART NO.	DESCRIPTION	SPEC.	QTY.	REPAIR	EFFECTIVE DATE	REMARKS
036	002	15642210050	SHAFT , PTO		1			
036	003	V6001106305	BEARING , BALL	6305	1			
036	005	V6001106005	BEARING , BALL	6005	2			
036	007	15642210060	GEAR , HELICAL 31T		1			
036	009	15642200032	SHAFT , PTO		1			
036	010	15642210012	GEAR , HELICAL 33T		1			
036	011	15642210024	SHAFT , IDLE		1			
036	012	15972180010	BEARING , BALL		2			
036	013	V6001106205	BEARING , BALL	6205	1			
036	015	15933070521	COLLAR , 26X35X03		1			
036	016	15642212003	CLUTCH ASSY		1	C		
036	017	15642212080	SEAL , A		1	B		
036	018	15642212050	DISK , CLUTCH		1			
036	019	15642212030	PLATE ASSY		1			
036	020	V7051400950	C-RING , HOLE	95	1			
036	021	15642212040	SPRING		4			
036	022	15642212060	PLATE		1			
036	023	15642212070	DISK , BRAKE		1			
036	024	14462162180	SEAL SET , B		2	B		
036	025	15602200040	COUPLING , 36X62		2			
036	026	15642212090	SEAL ,C		1			
036	027	16342212050	PLATE,CLUTCH		6			

NOTE

FIG 037 4510C	MAIN CHANGE LEVER	P1	Month/Year 06 / 2005

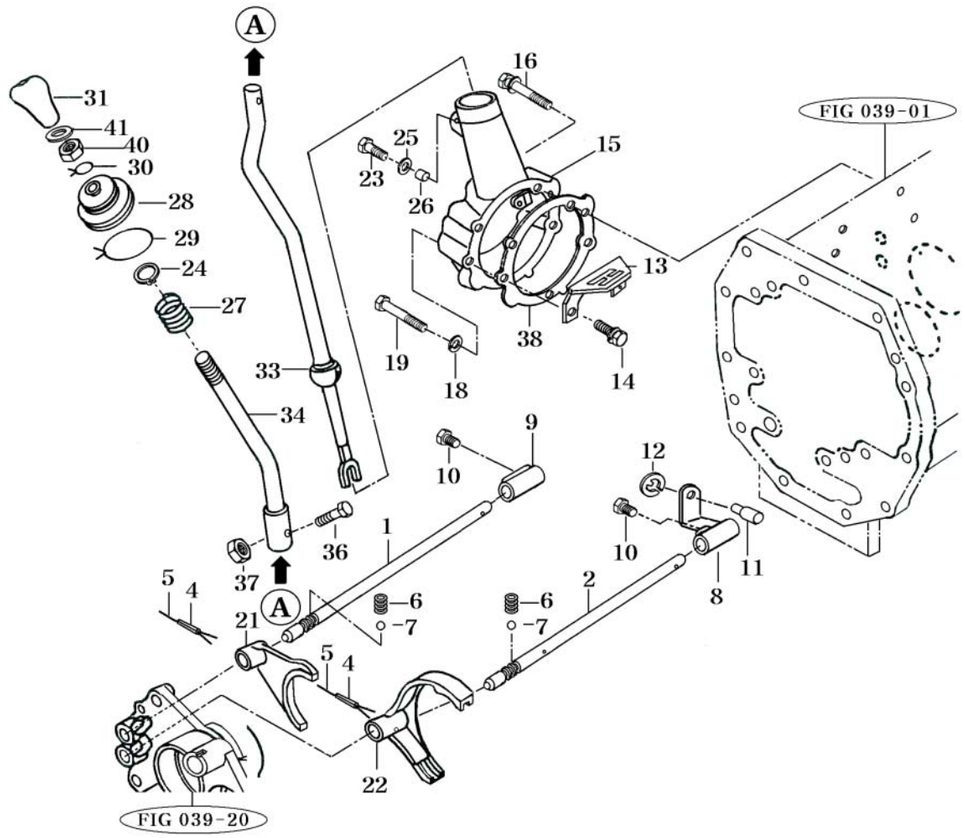

NOTE

FIG 037 4510C		P1	Month / Year 06 / 2005

KEY NO.		PART NO.	DESCRIPTION	SPEC.	QTY.	REPAIR	EFFECTIVE DATE	REMARKS
037	001	15642230050	STAY , SHIFTER 1ST		1			
037	002	15642230060	STAY , SHAFT 3RD		1			
037	004	V5801406025	PIN , SPRING	6X25	2			
037	005	V5901010150	WIRE , STEEL	1.0X150	2			
037	006	13022250030	SPRING , SHIFTER		2			
037	007	V6802000010	BALL , STEEL		2			
037	008	15642230033M	LINK		1			
037	009	15642230043M	LINK		1			
037	010	15602231600	BOLT , SET SEAL LOCK		2			
037	011	15602230124	PIN , 10X28		1			
037	012	V7081400070	E-RING	7	1			
037	013	15602230074	GUIDE		1			
037	014	V2173608016	BOLT , HEX/S	M8X16	2			
037	015	15612230026M	METAL , MAIN		1			
037	016	V2173608050	BOLT . HEX/S	M8X50	2			
037	018	15602230085	SEAL		1			
037	019	V2013608050	BOLT , HEX	M8X50	1			
037	021	15602230018M	FORK , SHIFTER MAIN		1			
037	022	15602230026M	FORK , SHIFTER MAIN		1			
037	023	16007060020	BOLT . DRAIN		1			
037	024	V7051400320	C-RING , HOLE	32	1			
037	025	15602230085	SEAL		1			
037	026	V5201006016	PIN , PARALLEL/A	6X16	1			
037	027	15602900063	SPRING , C020		1			
037	028	14442180090	BOOT , CHANGE LEVER		1	B		
037	029	V5901010180	WIRE , STEEL	1.0X180	1			
037	030	V5901010070	WIRE , STEEL	1.0X70	1			
037	031	14502810074	GRIP COMP , MAIN SHIFTER		1			
037	033	16002912000	LEVER COMP , BAR 16		1			
037	034	15662912104DG	LEVER COMP , BAR 16		1			
037	036	V2013608035	BOLT , HEX	M8X35	1			
037	037	V3042600080	NUT , HEX/2	M8	1			
037	038	16602250040	GASKET , MAIN METAL		1	B		
037	040	V3342600100	NUT , HEX FINE/2	M10	1			
037	041	V4111600100	WASHER , PLAIN		1			

NOTE

FIG 038	REVERSE CHANGE LEVER	P1	Month/Year
4510C			06 / 2005

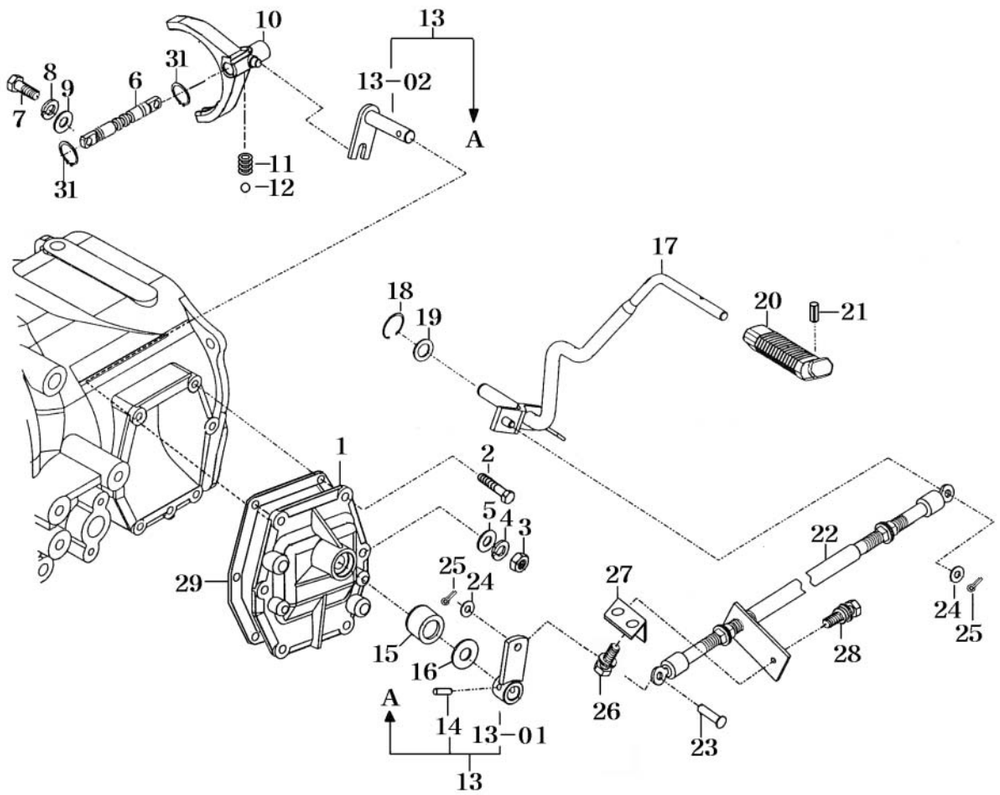

NOTE

FIG 038	REVERSE CHANGE LEVER	P1	Month / Year
4510C			06 / 2005

KEY NO.		PART NO.	DESCRIPTION	SPEC.	QTY.	REPAIR	EFFECTIVE DATE	REMARKS
038	001	15602250015M	METAL , SHIFTER REVERSE		1			
038	002	V2183608020	BOLT , HEX/SP	M8X20	4			
038	003	V3042600080	NUT , HEX/2	M8	2			
038	004	V4011600080	WASHER , SPRING	M8	2			
038	005	V4111600080	WASHER , PLAIN	M8	2			
038	006	15602250025	STAY , SHIFTER REVERSE		1			
038	007	14151210090	BOLT , REAMER		2			
038	008	V4011600080	WASHER , SPRING	M8	2			
038	009	V4111600080	WASHER , PLAIN	M8	2			
038	010	15642260013M	FORK , SHIFTER REVERSE		1			
038	011	13022250030	SPRING , SHIFTER	D=1.4	1			
038	012	V6802000010	BALL , STEEL	5—16	1			
038	013	15602252200	ARM SET , REVERSE		1			
038	01301	15602252300	ARM COMP		1			
038	01302	15602232002	HOOK COMP		1			
038	014	V5111006036	PIN , TAPER SPLIT	6X36	1			
038	015	V7441142508	SEAL , OIL/D	D14258	1	B		
038	016	13667012020	WASHER		1			
038	017	15662832004	LEVER COMP , BAR 14		1			
038	018	V7041400140	C-RING , SHAFT	14	1			
038	019	14276010030	WASHER , 15X24X2		2			
038	020	15441170051	GRIP , 10X115		1			
038	021	V5801403016	PIN , SPRING	3X16	1			
038	022	16002842002	CABLE ASSY . REVERSE		1	C		
038	023	14322420010	PIN		1			
038	024	V4111600080	WASHER , PLAIN	M8	2			
038	025	V5001920020	PIN , SPLIT	2X20	2			
038	026	V2173608025	BOLT , HEX/S	M8X25	2			
038	027	17702844701DG	PLATE		1			
038	028	V2183608016	BOLT , HEX/SP	M8X16	2			
038	029	16602250010	GASKET , REVERSE METAL		1	B		
038	031	V7041400140	C-RING , SHAFT	14	2			

NOTE

FIG 039 4510C	TRANSMISSION MID CASE	P1	Month/Year 06 / 2005

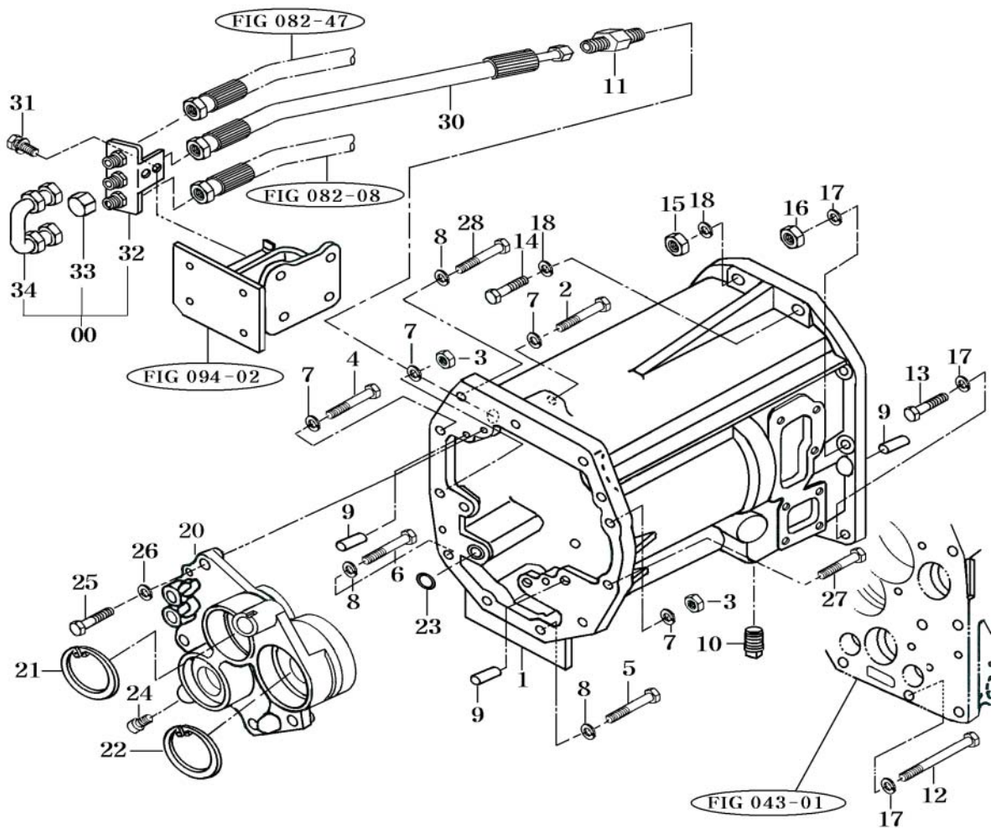

NOTE

FIG 039 4510C	TRANSMISSION MID CASE	P1	Month / Year 06 / 2005

KEY NO.		PART NO.	DESCRIPTION	SPEC.	QTY.	REPAIR	EFFECTIVE DATE	REMARKS
039	000	15006253102DG	BRACKET SUB , LODER		1			
039	001	15642300017M	CASE , SPACER TRANSMISSION		1			
039	002	V2013612080	BOLT , HEX	M12X80	1			
039	003	V3043600120	NUT , HEX/2	M12	2			
039	004	V2013612040	BOLT , HEX	M12X40	1			
039	005	V2013614040	BOLT , HEX	M14X40	5			
039	006	V2013614050	BOLT , HEX	M14X50	1			
039	007	V4011600120	WASHER , SPRING	M12	5			
039	008	V4011600140	WASHER , SPRING	M14	6			
039	009	V5201010022	PIN , PARALLEL/A	10X22	4			
039	010	V7811600008	PLUG , SQUARE	R1/2	1			
039	011	14505152380	ELBOW , 45		1			
039	012	V2004612100	BOLT , HEX	M12X100	2			
039	013	V2013612035	BOLT , HEX	M12X35	2			
039	014	V2013614040	BOLT , HEX	M14X40	2			
039	015	V3043600140	NUT , HEX/2	M14	2			
039	016	V3043600120	NUT , HEX/2	M12	2			
039	017	V4011600120	WASHER , SPRING	M12	6			
039	018	V4011600140	WASHER , SPRING	M14	4			
039	020	16602332011M	METAL , REVERSE		1			
039	021	V7051400620	C-RING , HOLE	62	1			
039	022	V7051400720	C-RING , HOLE	72	1			
039	023	V7201124014	O-RING , P	P14	1	B		
039	024	13267060022	PLUG , DRAIN		1			
039	025	V2013612030	BOLT , HEX	M12X30	4			
039	026	V4011600120	WASHER , SPRING	M12	4			
039	027	V2013612045	BOLT , HEX	M12X45	1			
039	028	V2013614045	BOLT , HEX	M14X45	2			
039	030	15004072501	HOSE ASSY , HYD 630		1	C		
039	031	V2173608020	BOLT , HEX/S	M8X20	2			
039	032	15006252201	BRACKET COMP		1			
039	033	15006210111	CAP , PF1/2		1			
039	034	15004073200	PIPE COMP		1			

NOTE

FIG 043	TRANSMISSION REAR CASE	P1	Month/Year
4510C			06 / 2005

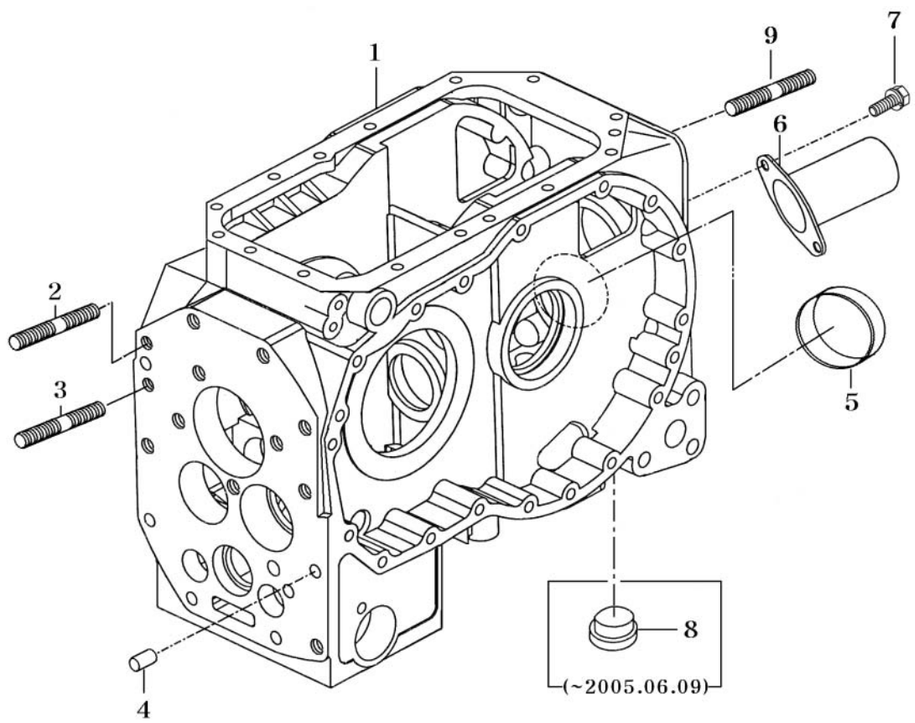

NOTE

FIG 043	TRANSMISSION REAR CASE	P1	Month / Year
4510C			06 / 2005

KEY NO.		PART NO.	DESCRIPTION	SPEC.	QTY.	REPAIR	EFFECTIVE DATE	REMARKS
043	001	15642400019M	CASE , RR TRANSMISSION		1			
043	002	V2513414035	BOLT , STUD/2	M14X35	2			
043	003	V2513412035	BOLT , STUD/2	M12X35	2			
043	004	V5201010022	PIN , PARALLEL/A	10X22	8			
043	005	14254330180	CAP , 72		1	C		
043	006	14443140091	CAP , PTO SHAFT		1	C		
043	007	V2183608016	BOLT , HEX/SP	M8X16	2			
043	008	14273170040	CAP , M14		4		~2005.06.09	
043	009	V2513416035	BOLT , STUD/2	M16X35	2			

NOTE

FIG 044	SUB CHANGE GEARS	P1	Month/Year
4510C			06 / 2005

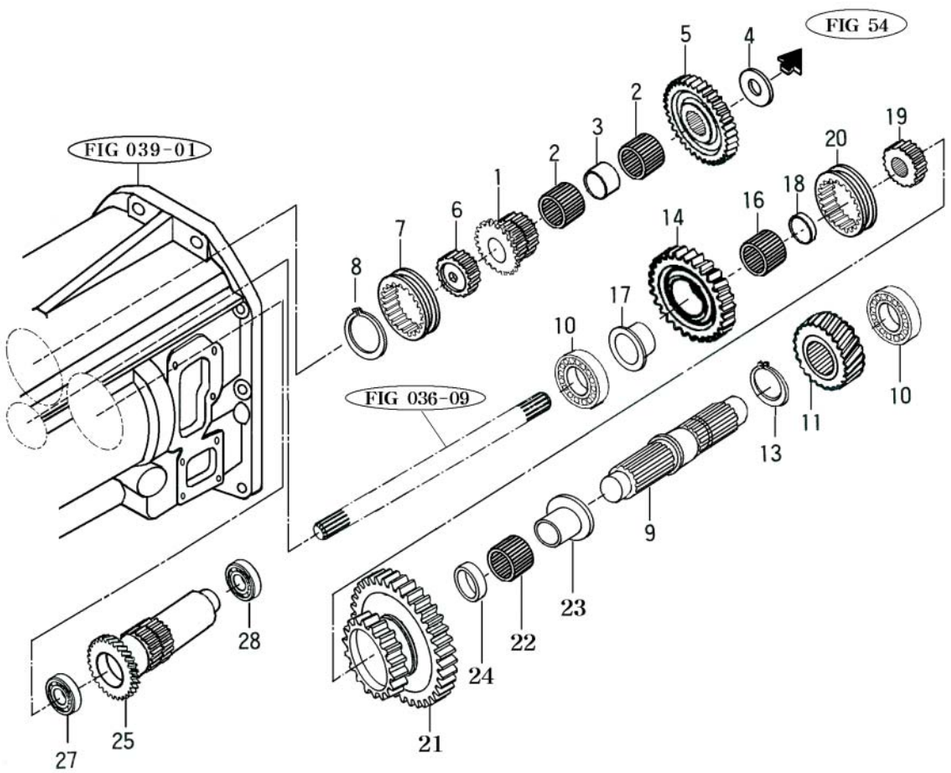

NOTE

FIG 044		P1	Month / Year
4510C			06 / 2005

KEY NO.		PART NO.	DESCRIPTION	SPEC.	QTY.	REPAIR	EFFECTIVE DATE	REMARKS
044	001	15642430013	GEAR , SPUR 16T		1			
044	002	V6544303517	BEARING , NEEDLE.ROLLER	KT303517	2			
044	003	15642430021	COLLAR , 30X34X10		1			
044	004	15642430032	WASHER , 30X50X4		1			
044	005	15642430042	GEAR , SPUR 41T		1			
044	006	15642430110	HUB , 30X62X19		1			
044	007	15242360050	COUPLING , SLIDE		1			
044	008	V7041400300	C-RING , SHAFT	30	1			
044	009	15642430053	SHAFT		1			
044	010	V6001106207	BEARING , BALL	6207	2			
044	011	15642430062	GEAR , HELICAL 24T		1			
044	013	V7041400400	C-RING , SHAFT	40	1			
044	014	15642430073	GEAR , HELICAL 39T		1			
044	016	V6544455017	BEARING , NEEDLE.ROLLER	KT455017	1			
044	017	15602430134	BUSH , 40X58X29		1			
044	018	15602430154	COLLAR , 46X50X08		1			
044	019	15602430173	HUB , 40X62X20		1			
044	020	15242360050	COUPLING , SLIDE		1			
044	021	15642430082	GEAR , SPUR 40T		1			
044	022	V6544455017	BEARING , NEEDLE.ROLLER	KT455017	1			
044	023	15602430134	BUSH , 40X58X29		1			
044	024	15602430154	COLLAR , 46X50X08		1			
044	025	15642500012	GEAR , 35-11T		1			
044	027	V6001106205	BEARING , BALL	6205	1			
044	028	V6001106304	BEARING , BALL	6304	1			

NOTE

FIG 045	SUB CHANGE LEVER	P1	Month/Year
4510C			06 / 2005

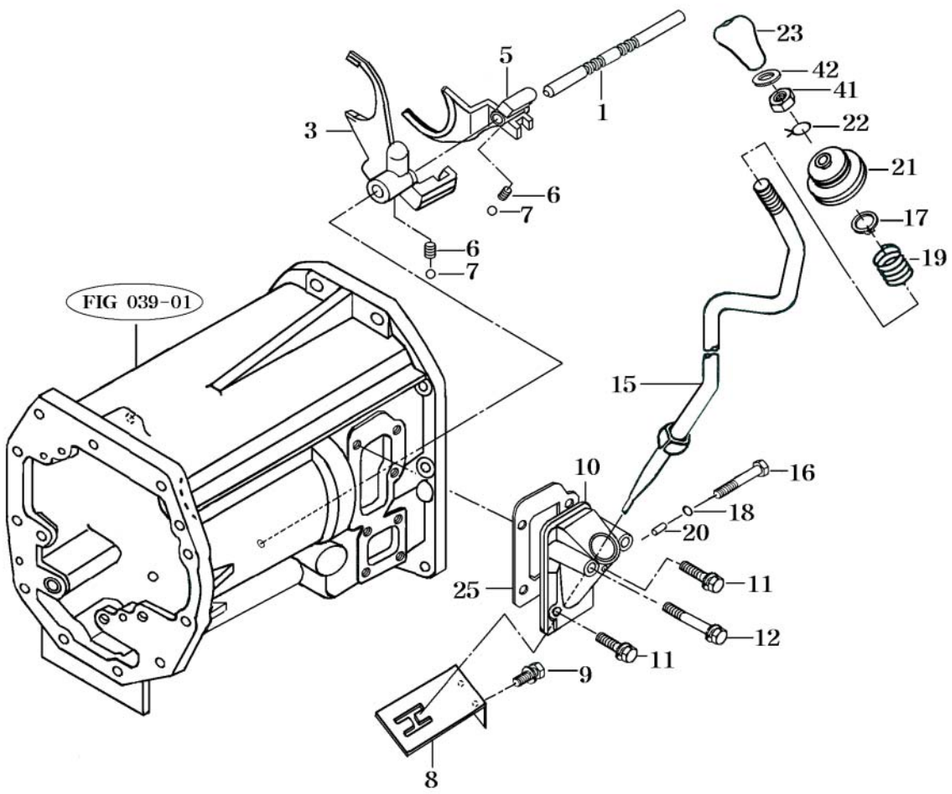

NOTE

FIG 045		P1	Month / Year
4510C			06 / 2005

KEY NO.		PART NO.	DESCRIPTION	SPEC.	QTY.	REPAIR	EFFECTIVE DATE	REMARKS
045	001	15642590013	STAY , SHIFTER SUB		1			
045	003	15642590024M	FORK , SHIFTER SUB		1			
045	005	15642590034M	HOOK , SHIFT		1			
045	006	13022250030	SPRING , SHIFTER		2			
045	007	V6802000010	BALL , STEEL		2			
045	008	15602590124	GUIDE		1			
045	009	V2173610020	BOLT , HEX/S	M10X20	2			
045	010	15602590014M	METAL , SUB		1			
045	011	V2183608025	BOLT , HEX/SP	M8X25	2			
045	012	V2183608065	BOLT , HEX/SP	M8X65	2			
045	015	16002810012	LEVER , BAR 16		1			
045	016	16007060020	BOLT . DRAIN	M8X12XP1.25	1			
045	017	V7051400320	C-RING , HOLE	32	1			
045	018	15602230085	SEAL		1			
045	019	15602900063	SPRING , C020		1			
045	020	V5201006016	PIN , PARALLEL/A	6X16	1			
045	021	15602800044	BOOT		1	B		
045	022	V5901010070	WIRE , STEEL	1.0X70	1			
045	023	15002810104	GRIP COMP , SUB SHIFT GRIP		1			
045	025	16602250020	GASKET , SUB METAL		1	B		
045	041	V3342600100	NUT , HEX FINE/2	M10	1			
045	042	V4111600100	WASHER , PLAIN		1			

NOTE

FIG 047 4510C	4WD DRIVE GEARS	P1	Month/Year 06 / 2005

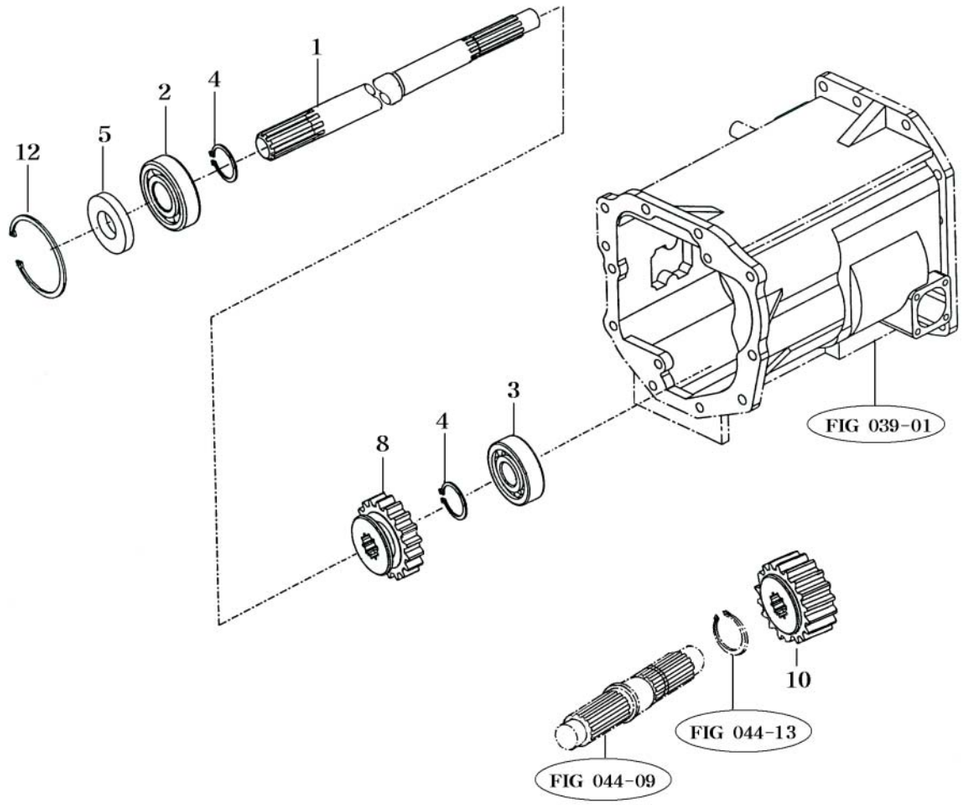

NOTE

FIG 047 4510C		P1	Month / Year 06 / 2005

KEY NO.		PART NO.	DESCRIPTION	SPEC.	QTY.	REPAIR	EFFECTIVE DATE	REMARKS
047	001	15642610040	SHAFT		1			
047	002	V6001106005	BEARING , BALL	6005	1			
047	003	V6031106204	BEARING , BALL/HL	6204HL	1			
047	004	V7041400250	C-RING , SHAFT	25	2			
047	005	V7441254708	SEAL , OIL/D	D25478	1	B		
047	008	16352620010	GEAR , SPUR 26T		1			
047	010	15662620050	GEAR , SPUR 25T		1			
047	012	V7051400470	C-RING , HOLE	47	1			

NOTE

FIG 050 4510C	4WD CHANGE LEVER	P1	Month/Year 06 / 2005

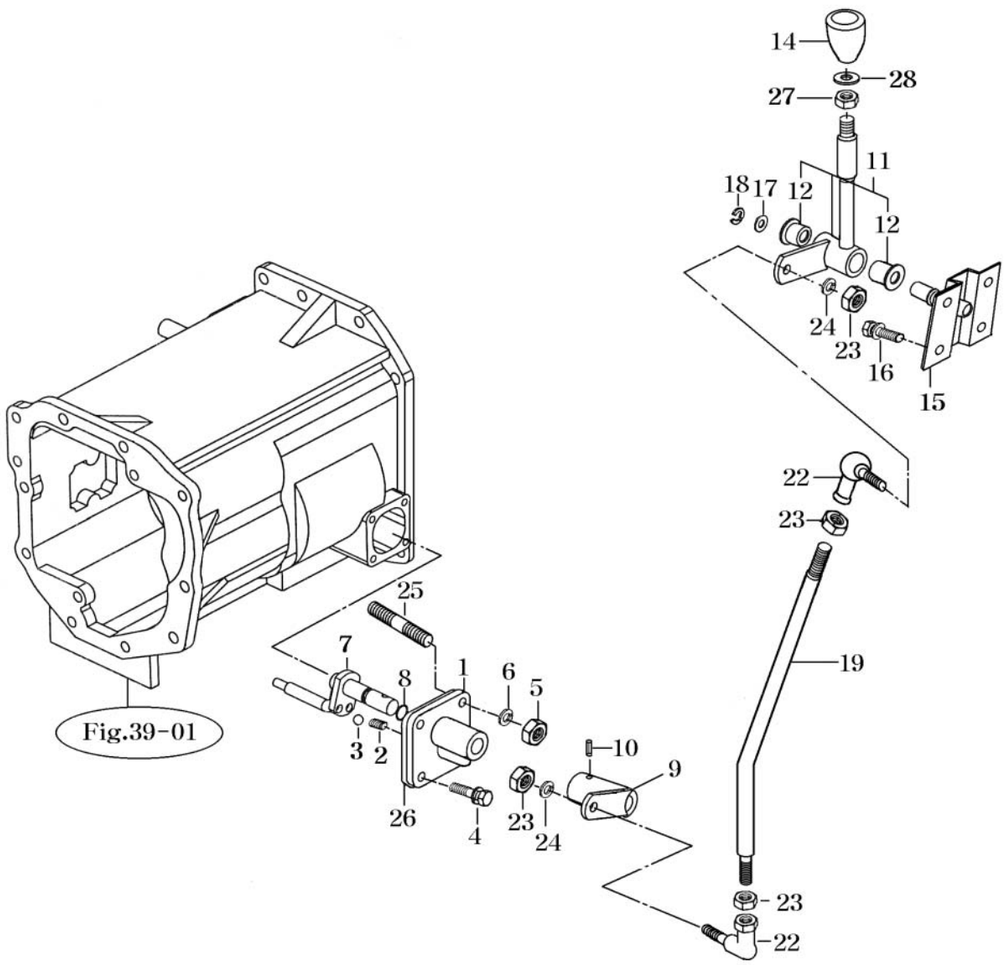

NOTE

FIG 050 4510C		P1	Month / Year 06 / 2005

KEY NO.		PART NO.	DESCRIPTION	SPEC.	QTY.	REPAIR	EFFECTIVE DATE	REMARKS
050	001	15602650021M	METAL , SHIFTER		1			
050	002	13022250030	SPRING , SHIFTER		1			
050	003	V6802000010	BALL , STEEL		1			
050	004	V2173608020	BOLT , HEX/S	M8X20	2			
050	005	V3042600080	NUT , HEX/2	M8	2			
050	006	V4011600080	WASHER , SPRING	M8	2			
050	007	15602652202	ARM COMP		1			
050	008	V7201024014	O-RING , P	P14	1			
050	009	16322652000	ARM COMP , PLATE		1			
050	010	V5801406025	PIN , SPRING	6X25	1			
050	011	16992872500	LEVER ASSY , BAR 12		1			
050	012	15602870023	BUSH , 16X24X15		2			
050	014	16992190062	GRIP , 4WD		1			
050	015	15642872002DG	BRACKET COMP		1			
050	016	V2173608016	BOLT , HEX/S	M8X16	4			
050	017	36212110030	WASHER , TENSION ARM		1			
050	018	V7041400160	C-RING , SHAFT	16	1			
050	019	16322880020	ROD		1			
050	022	36402200040	ELBOW , RH		2			
050	023	V3042600080	NUT , HEX/2	M8	4			
050	024	V4011600080	WASHER , SPRING	M8	2			
050	025	V2513408020	BOLT , STUD/2	M8X20	2			
050	026	14443120050	PACKING , BOSS		1	B		
050	027	V3342600100	NUT , HEX FINE/2	M10	1			
050	028	V4111600100	WASHER , PLAIN	M10	1			

NOTE

FIG 051	P.T.O CHANGE GEARS	P1	Month/Year
4510C			06 / 2005

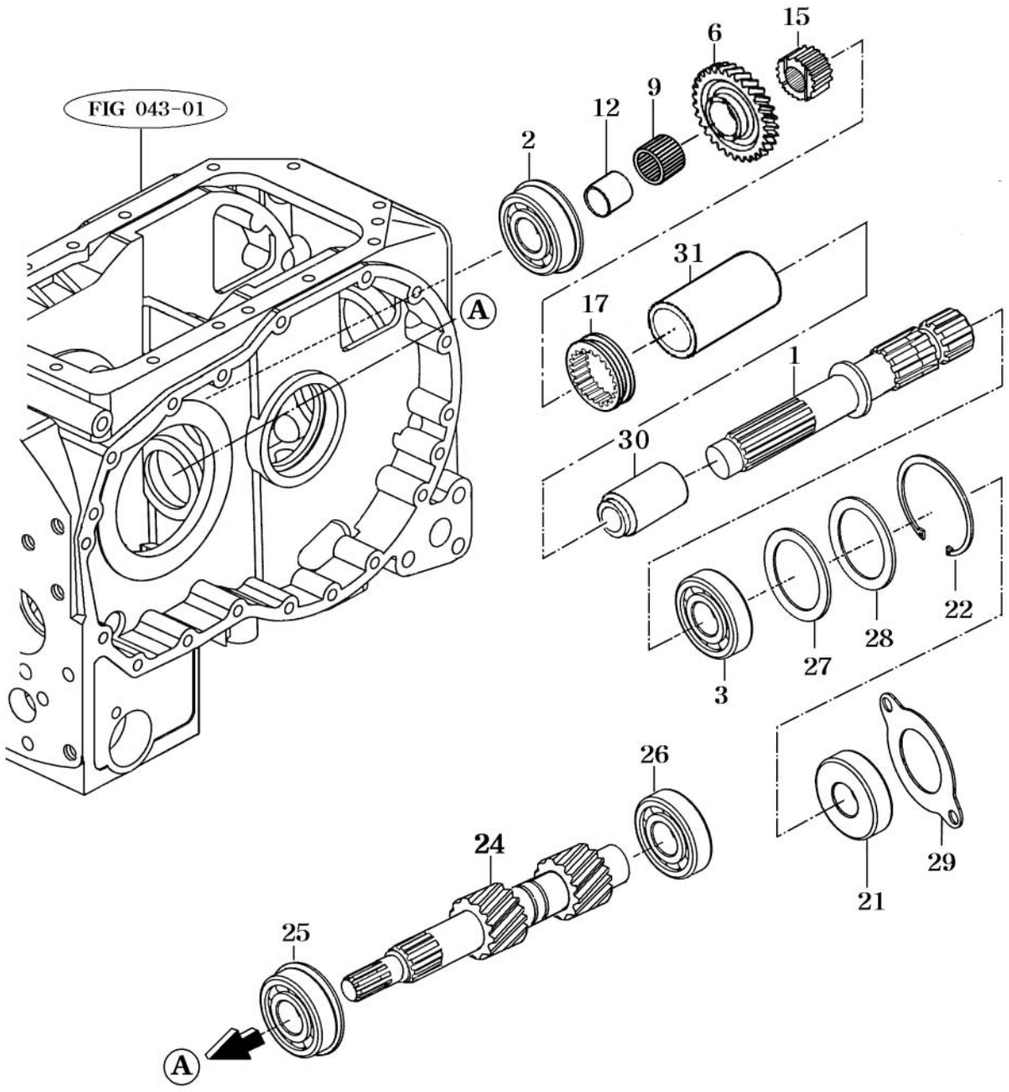

NOTE

FIG 051	P.T.O CHANGE GEARS	P1	Month / Year
4510C			06 / 2005

KEY NO.		PART NO.	DESCRIPTION	SPEC.	QTY.	REPAIR	EFFECTIVE DATE	REMARKS
051	001	15642730015	SHAFT , PTO		1			
051	002	V6041606305	BEARING , BALL/HL1	6305HL1N	1			
051	003	36531080070	BEARING , BALL	BL207	1			
051	006	15662730032	GEAR , HELICAL 36T		1			
051	009	V6544404527	BEARING , NEEDLE.ROLLER	KT404527	1			
051	012	15642730072	BUSH , 35X40X37		1			
051	015	15642730052	HUB , 35X62X20		1			
051	017	15242360050	COUPLING , SLIDE		1			
051	021	16322732000	SEAL ASSY , OIL		1			
051	022	V7051400720	C-RING , HOLE	72	1			
051	024	12902700020	GEAR , HELICAL 12-18		1			
051	025	V6041606305	BEARING , BALL/HL1	6305HL1N	1			
051	026	V6041106306	BEARING , BALL/HL1	6306HL1	1			
051	027	79642010080	SHIM , B		1			
051	028	16322730030	SHIM , 0.5		1			
051	029	16322730040	COVER		1			
051	030	12902750090	COLLAR		1			
051	031	14512730010	COLLAR(35x64x34)		1			

NOTE 2 Speed PTO

FIG 052	P.T.O CHANGE LINKAGE	P1	Month/Year
4510C			06 / 2005

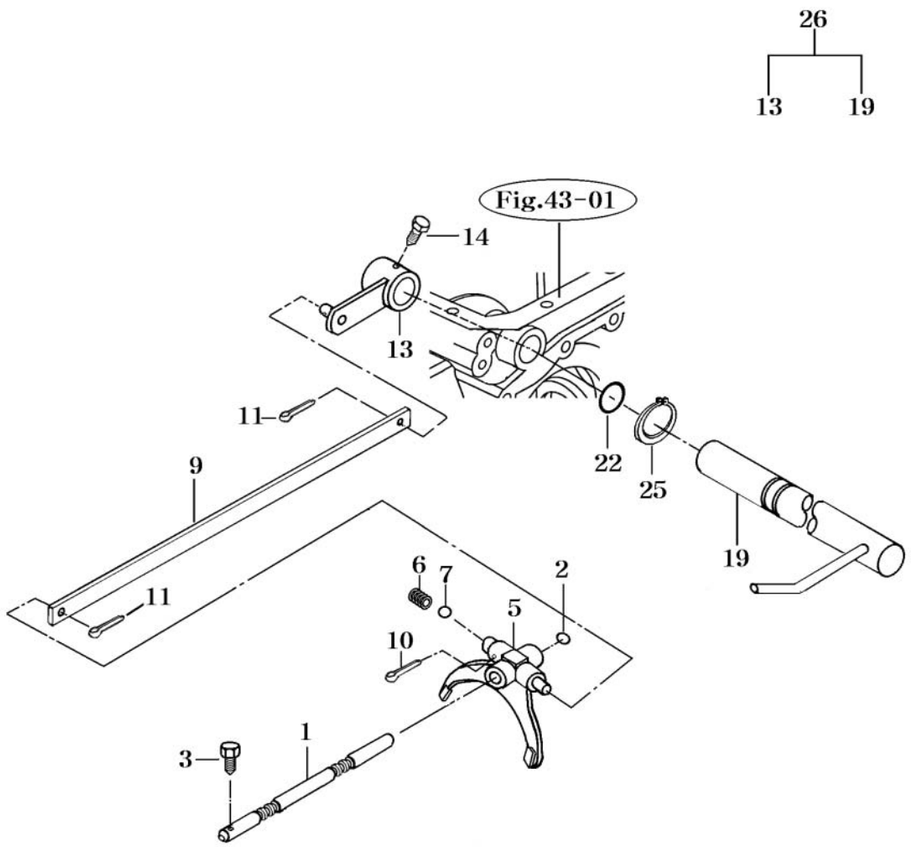

NOTE

FIG 052	P.T.O CHANGE LINKAGE	P1	Month / Year
4510C			06 / 2005

KEY NO.		PART NO.	DESCRIPTION	SPEC.	QTY.	REPAIR	EFFECTIVE DATE	REMARKS
052	001	15642750014	STAY , SHIFTER PTO		1			
052	002	V7201024010	O-RING , P	P10A	1	B		
052	003	15602231600	BOLT , SET SEAL LOCK	M8X16	1			
052	005	15642750033M	FORK , SHIFTER PTO		1			
052	006	13022250030	SPRING , SHIFTER		1			
052	007	V6802000010	BALL , STEEL		1			
052	009	16602750050	PLATE , 19X396		1			
052	010	V5001930025	PIN , SPLIT	3X25	1			
052	011	V5001925020	PIN , SPLIT	2.5X20	2			
052	013	15642752103	ARM COMP		1			
052	014	15602231600	BOLT , SET SEAL LOCK	M8X16	1			
052	019	12102752301	ARM COMP		1			
052	022	V7201024021	O-RING , P	P21	1			
052	025	V7041400250	C-RING , SHAFT	25	1			
052	026	12102750200	ARM SET. PTO		1			

NOTE 2Speed PTO

FIG 053	P.T.O CHANGE LEVER	P1	Month/Year
4510C			06 / 2005

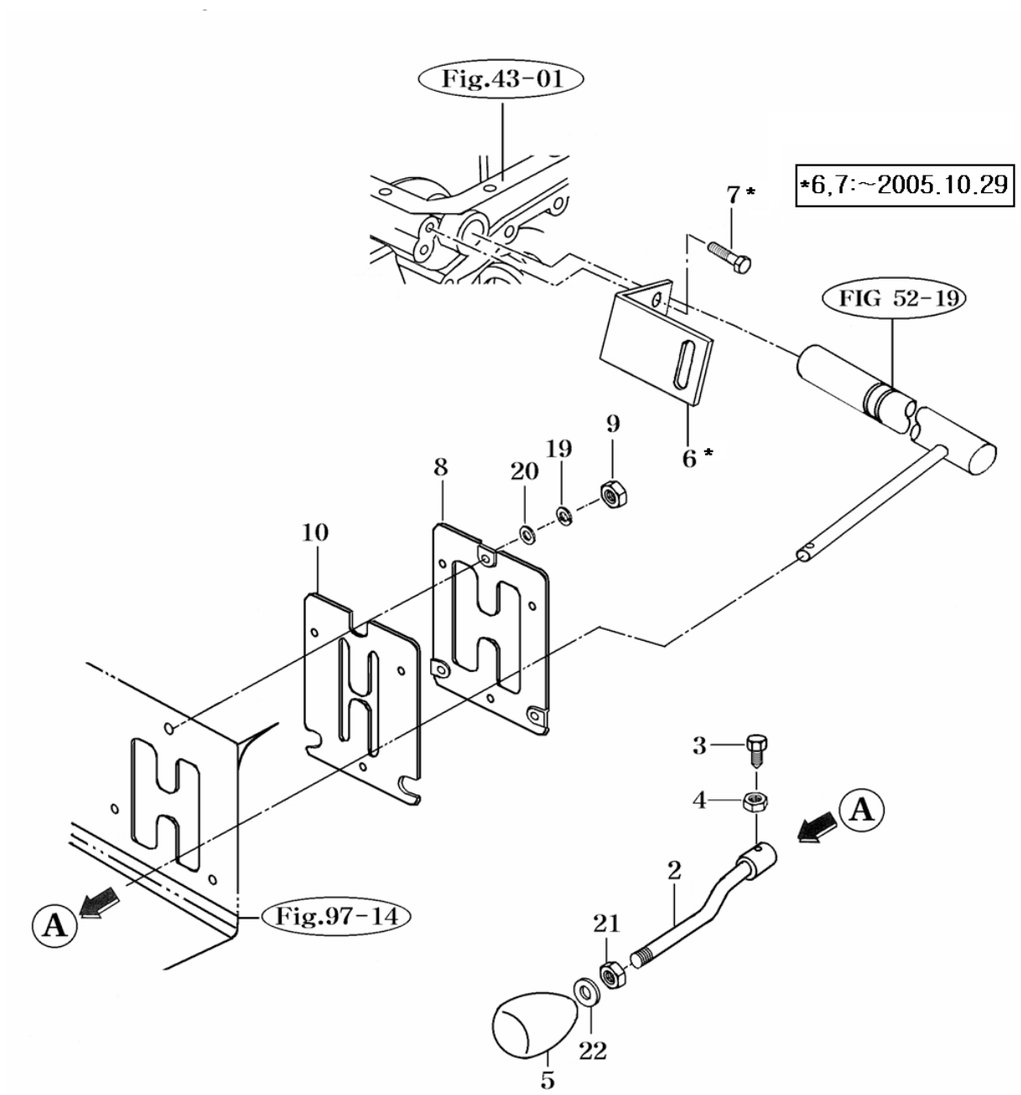

NOTE

FIG 053	P.T.O CHANGE LEVER	P1	Month / Year
4510C			06 / 2005

KEY NO.		PART NO.	DESCRIPTION	SPEC.	QTY.	REPAIR	EFFECTIVE DATE	REMARKS
053	002	15652852105DG	LEVER COMP , BAR 12		1			
053	003	15602231610	BOLT , SET M8X16	M8X16	1			
053	004	V3042600080	NUT , HEX/2	M8	1			
053	005	16992190101	GRIP , PTO		1			
053	006	12102850200	GUIDE		1		~2005.10.29	
053	007	V2173610020	BOLT , HEX/S	M10X20	2		~2005.10.29	
053	008	15642850024DG	GUIDE		1			
053	009	V3002600060	NUT , HEX/1	M6	3			
053	010	16602850020	INSULATOR , PTO		1		~2005.12.29	
053	010	16602850021	INSULATOR , PTO		1		2005.12.30~	
053	019	V4011600060	WASHER , SPRING	M6	3			
053	020	V4111600060	WASHER , PLAIN	M6	3			
053	021	V3342600100	NUT , HEX FINE/2	M10	1			
053	022	V4111600100	WASHER , PLAIN	M10	1			

NOTE 2Speed PTO

FIG 054	REAR DIFFERENTIAL GEARS	P1	Month/Year
4510C			06 / 2005

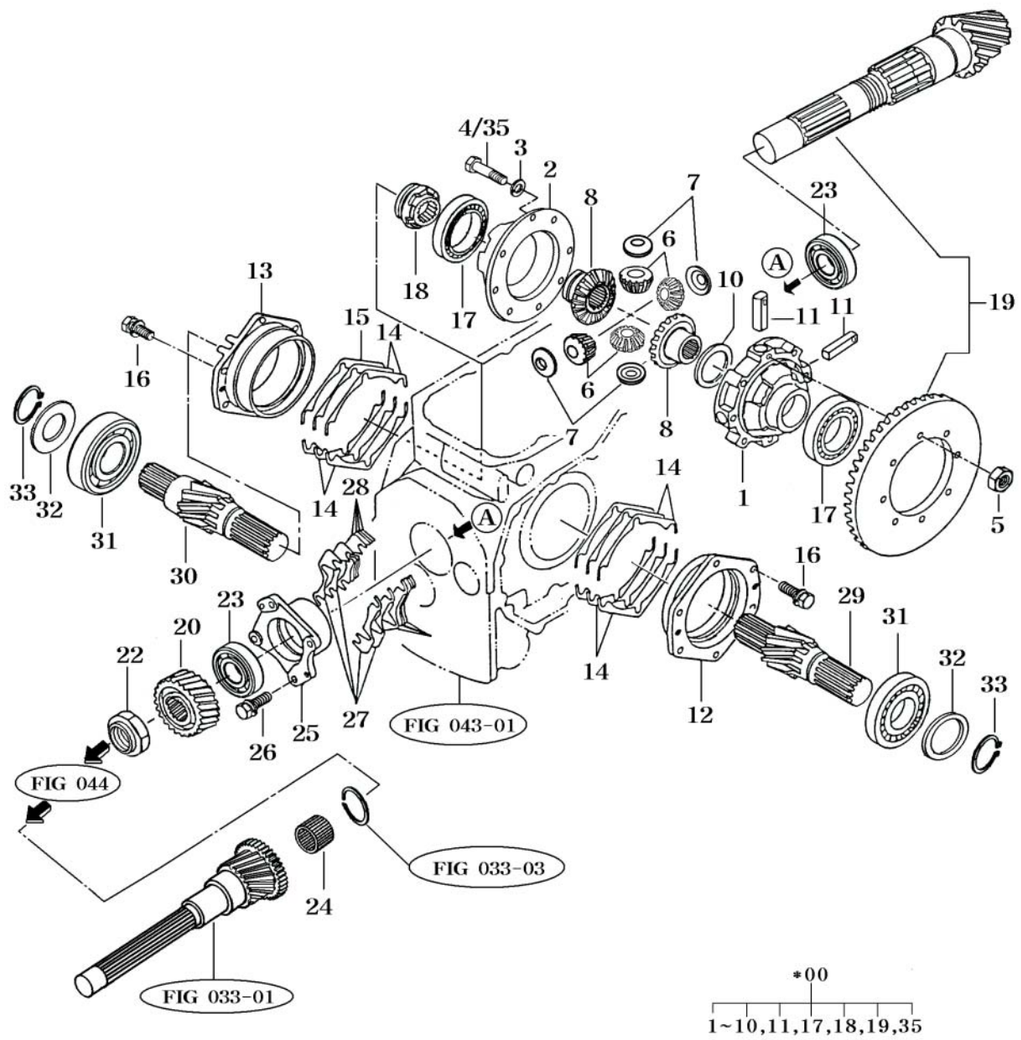

* NOT SERVICED SEPARATELY

NOTE

FIG 054	REAR DIFFERENTIAL GEARS	P1	Month / Year
4510C			06 / 2005

KEY NO.		PART NO.	DESCRIPTION	SPEC.	QTY.	REPAIR	EFFECTIVE DATE	REMARKS
054	000	16603022000	DIFF SET , RR 11-48T		1			
054	001	14883010011	CASE , LH DIFF		1			
054	002	15033010010	CASE , RH DIFF		1			
054	003	V4011600100	WASHER , SPRING	M10	8			
054	004	16353030011	BOLT , SM10X1.25X65		6			
054	005	16353030050	NUT , M10	M10X1.25	8			
054	006	14313010090	PINION , DIFF 12T		4			
054	007	15643030040	COLLAR , PINION		4			
054	008	14313010060	GEAR , DIFF 20 A		2			
054	010	14313010050	COLLAR , THRUST 45X66X1		1			
054	011	14883010051	SHAFT , DIFF PINION		4			
054	012	14883010060M	METAL , LH DIFF CASE		1			
054	013	15643030013M	METAL , RH DIFF		1			
054	014	14883010080	SHIM , A		8			
054	015	14883010090	SHIM , B		4		~2004.11.30	
054	015	14883010090	SHIM , B		2		2004.12.01~	
054	016	V2173610025	BOLT , HEX/S	M10X25	12			
054	017	V6001106212	BEARING , BALL	6212	2			
054	018	15643030022	CLUTCH		1			
054	019	16603022100	GEAR SET , 11-48T		1			
054	020	15643010012	GEAR , HELICAL 29T		1			
054	022	15643010021	NUT , M36 P1,5		1			
054	023	15643010031	BEARING, TAPER ROLLER		2			
054	024	15683020010	BEARING , NEEDLE 253224		1			
054	025	15643010043M	METAL , PINION		1		~2005.07.19	
054	025	17683010040M	METAL , PINION		1		2005.07.20~	
054	026	V2173610025	BOLT , HEX/S	M10X25	4			
054	027	15643010052	SHIM , 0.2		4			
054	028	15643010062	SHIM , 0.1		4		~2004.11.30	
054	028	15643010062	SHIM , 0.1		1		2004.12.01~	
054	029	16353060010	PINION , LH HERICAL10T		1			
054	030	16353060020	PINION , RH HERICAL10T		1			
054	031	V6001106309	BEARING , BALL	6309	2			
054	032	15133060030	COLLAR , THRUST 45X68X4		2			
054	033	V7041400450	C-RING , SHAFT	45	2			
054	035	16353030020	BOLT , M10X65 P1.25		2			

NOTE

FIG 055

4510C

REAR AXLE & HOUSINGS

P1

Month/Year

06 / 2005

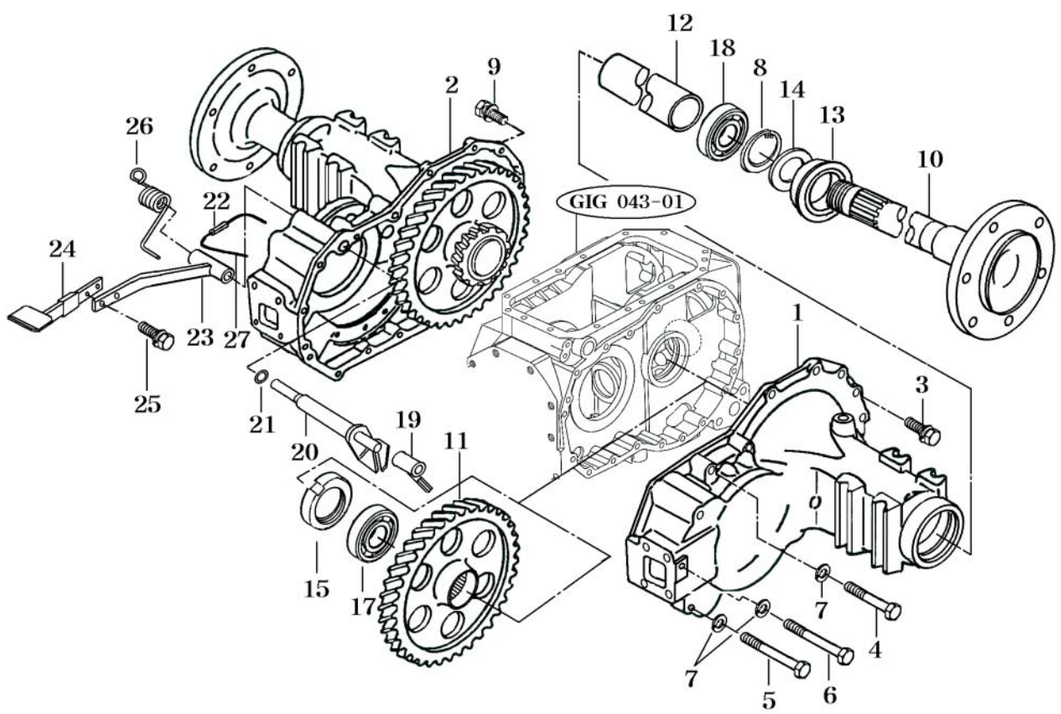

NOTE

FIG 055

4510C

REAR AXLE & HOUSINGS

P1

Month / Year

06 / 2005

KEY NO.		PART NO.	DESCRIPTION	SPEC.	QTY.	REPAIR	EFFECTIVE DATE	REMARKS
055	001	15643040015M	HOUSING , LH AXLE		1			
055	002	15643040025M	HOUSING , RH AXLE		1			
055	003	V2173610030	BOLT , HEX/S	M10X30	23			
055	004	V2173610060	BOLT , HEX/S	M10X60	6			
055	005	V2013610120	BOLT , HEX	M10X120	4			
055	006	V2013610130	BOLT , HEX	M10X130	2			
055	007	V4011600100	WASHER , SPRING	M10	6			
055	008	V7051401000	C-RING , HOLE	100	2			
055	009	V2173610030	BOLT , HEX/S	M10X30	1			
055	010	16353070012	SHAFT , WHEEL		2			
055	011	16353070021	GEAR , HELICAL 55T		2			
055	012	15643070032	COLLAR , 57X65X267		2			
055	013	15643072001	SEAL ASSY , OIL		2	B		
055	014	14153070020	COLLAR , 55X70X4		2			
055	015	16603070010	NUT , M50 P1.5		2	C		
055	017	V6261100210	BEARING , CYLINDER-ROLLER	NUP210	2			
055	018	V6001106211	BEARING , BALL	6211	2			
055	019	14883020022M	SHIFTER , DIFF LOCK		1			
055	020	15643032001	CAM COMP		1			
055	021	V7201024016	O-RING , P	P16	1	B		
055	022	V5801406025	PIN , SPRING	6X25	1			
055	023	15653162006	PEDAL COMP		1			
055	024	15603162100DG	PEDAL COMP , DIFF LO		1			
055	025	V2173610025	BOLT , HEX/S	M10X25	2			
055	026	15643160020	SPRING , HT 034		1			
055	027	V5901010100	WIRE , STEEL	1.0X100	1			

NOTE

FIG 056	BRAKE	P1	Month/Year
4510C			06 / 2005

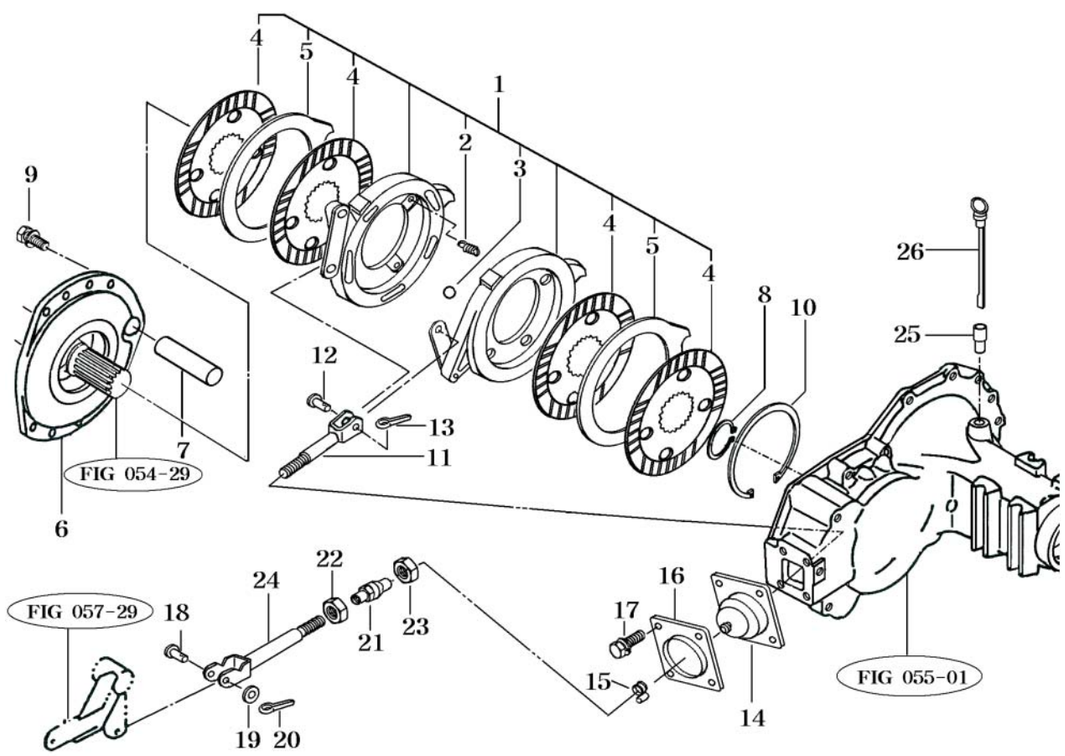

NOTE

FIG 056	BRAKE	P1	Month / Year
4510C			06 / 2005

KEY NO.		PART NO.	DESCRIPTION	SPEC.	QTY.	REPAIR	EFFECTIVE DATE	REMARKS
056	001	15643102602	BRAKE ASSY		2	C		
056	002	14443272030	SPRING , RETURN		6			
056	003	V6802000019	BALL , STEEL	19/32	12			
056	004	15643102611	DISK COMP , BRAKE		8	B		
056	005	15133102020	PLATE		4			
056	006	15143100010M	METAL , BRAKE		2			
056	007	14883100020	PIN , TORQUE		2			
056	008	V7041400450	C-RING , SHAFT	45	2			
056	009	V2173610025	BOLT , HEX/S	M10X25	16			
056	010	V7051401000	C-RING , HOLE	100	2			
056	011	14883102200	ROD COMP , BRAKE		2			
056	012	14443270030	PIN , 15X30		2			
056	013	V5001930025	PIN , SPLIT	3X25	2			
056	014	15603100035	BOOT		2	B		
056	015	14171020050	BAND , HOSE		2			
056	016	15603100045	PLATE		2			
056	017	V2173608016	BOLT , HEX/S	M8X16	8			
056	018	14043120060	PIN , YOKE		2			
056	019	V4111600080	WASHER , PLAIN	M8	2			
056	020	V5001920020	PIN , SPLIT	2X20	2			
056	021	16601220020	TURNBUCKLE , M8 L60		2			
056	022	V3042600080	NUT , HEX/2	M8	2			
056	023	15601320073	NUT , HEX LH		2			
056	024	15653102104	ROD COMP , FORK		2			
056	025	16323040010	GUIDE , CAGE		1			
056	026	16323040020	GAUGE , OIL		1			

NOTE

FIG 057	BRAKE PEDAL & LINKAGE	P1	Month/Year
4510C			06 / 2005

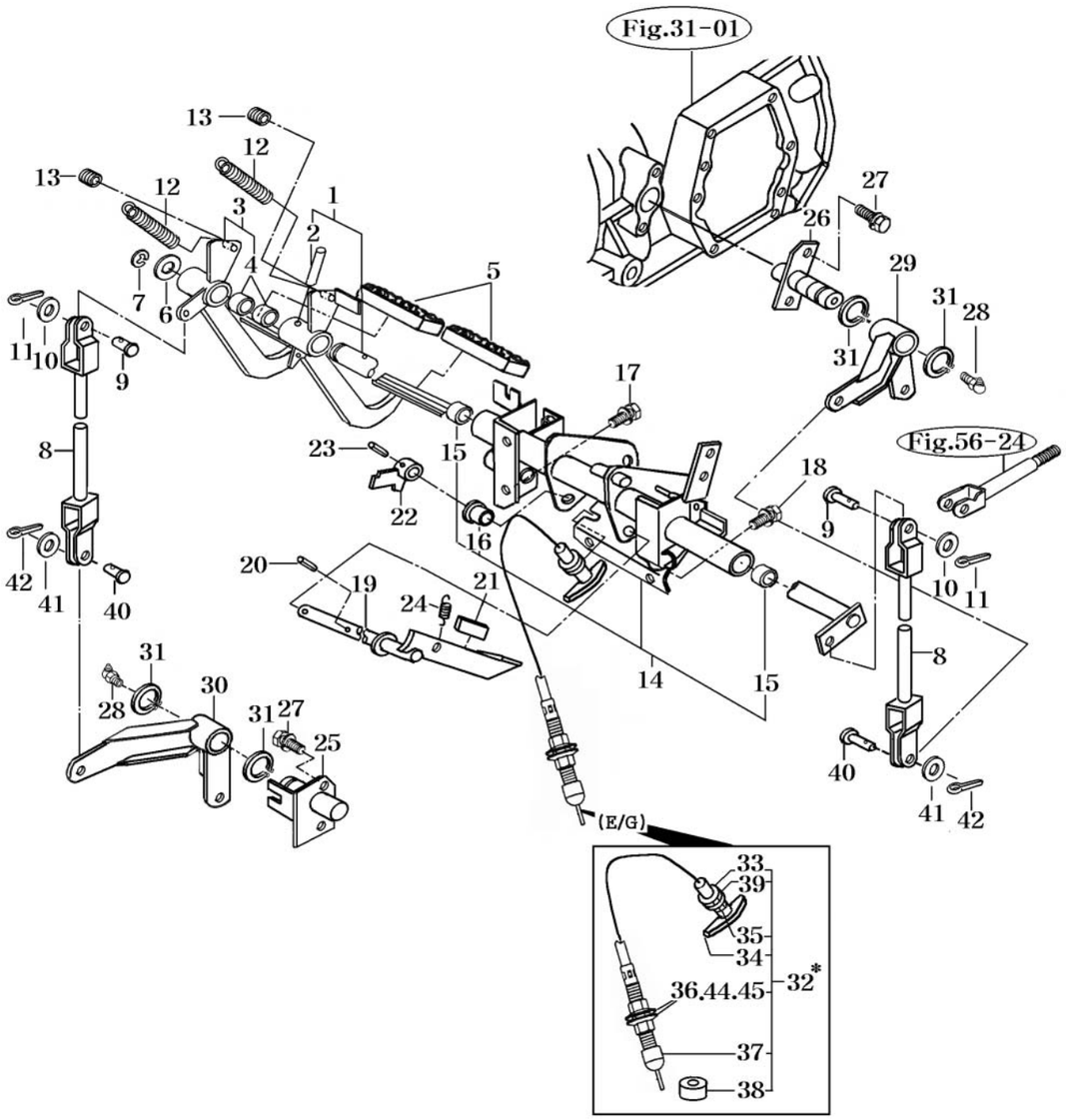

NOTE

FIG 057	BRAKE PEDAL & LINKAGE	P1	Month / Year
4510C			06 / 2005

KEY NO.		PART NO.	DESCRIPTION	SPEC.	QTY.	REPAIR	EFFECTIVE DATE	REMARKS
057	001	15663142402	PEDAL SET , LH		1			
057	002	V5111008050	PIN , TAPER SPLIT	8X50	1			
057	003	15643142402	PEDAL ASSY , RH		1			
057	004	36707030080	BUSH , 20X23X20		2			
057	005	15241220010	PAD		2	C		
057	006	V4111600200	WASHER , PLAIN	M20	1			
057	007	V7041400200	C-RING , SHAFT	20	1			
057	008	15603142503DG	ROD COMP , FORK		2			
057	009	14322420010	PIN		2			
057	010	V4111600080	WASHER , PLAIN	M8	2			
057	011	V5001925020	PIN , SPLIT	2.5X20	2			
057	012	14041200080	RETURN SPRING , CLUTCH		2			
057	013	15601320011	TUBE , CORRUGATE 1050		2			
057	014	16753143001	FRAME ASSY		1			
057	015	36707030080	BUSH , 20X23X20		2			
057	016	15603142910	BUSH , 16X18X15		1			
057	017	V2173608016	BOLT , HEX/S	M8X16	4			
057	018	V2183608016	BOLT , HEX/SP	M8X16	2			
057	019	16753143200DG	PEDAL COMP , PARKING		1			
057	020	V5801404025	PIN , SPRING	4X25	1			
057	021	15603140010	INSULATOR		1			
057	022	16753143600DG	ARM COMP , PARKING		1		~2005.06.30	
057	022	16753143601DG	ARM COMP , PARKING		1		2005.07.01~	
057	023	V5801406025	PIN , SPRING	6X25	1			
057	024	14321200040	SPRING , TENSION 31		1			
057	025	15643102104	PIN COMP		1			
057	026	15603102105	PIN COMP		1			
057	027	V2173608020	BOLT , HEX/S	M8X20	4			
057	028	V7631500000	NIPPLE , GREASE/B-PT	B-PT1/8	2			
057	029	15643102202DG	ARM COMP , LH		1			
057	030	15643102303DG	ARM COMP , RH		1			
057	031	V7041400250	C-RING , SHAFT	25	4			
057	032	15231013102	CABLE ASSY		1	C		
057	040	14322420010	PIN		2			
057	041	V4111600080	WASHER , PLAIN	M8	2			
057	042	V5001925020	PIN , SPLIT	2.5X20	2			

NOTE

FIG 058	REAR WHEEL MOUNTING	P1	Month/Year
4510C			06 / 2005

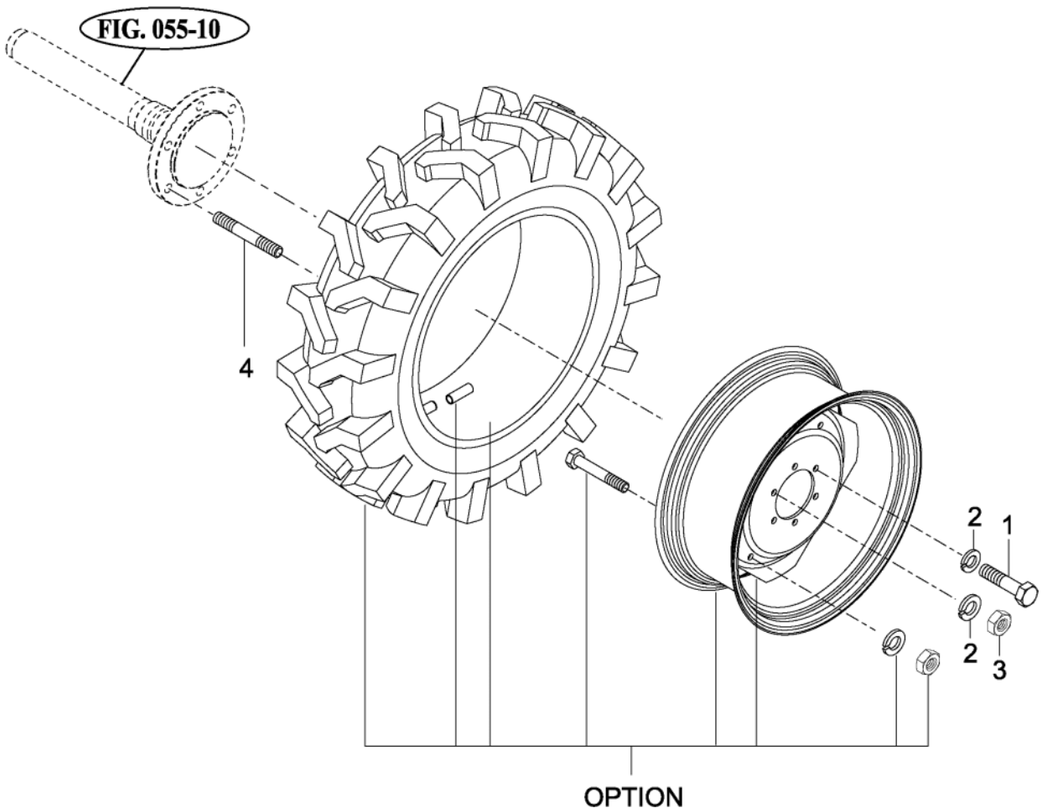

NOTE

FIG 058	REAR WHEEL MOUNTING	P1	Month / Year
4510C			06 / 2005

KEY NO.		PART NO.	DESCRIPTION	SPEC.	QTY.	REPAIR	EFFECTIVE DATE	REMARKS
058	001	V2013616030	BOLT , HEX	M16X30	8			
058	002	V4011600160	WASHER , SPRING	M16	12			
058	003	V3043600160	NUT , HEX/2	M16	4			
058	004	15603200010	BOLT , STUD M16X30		4			

NOTE Option

FIG 059	STEERING WHEEL	P1	Month/Year
4510C			06 / 2005

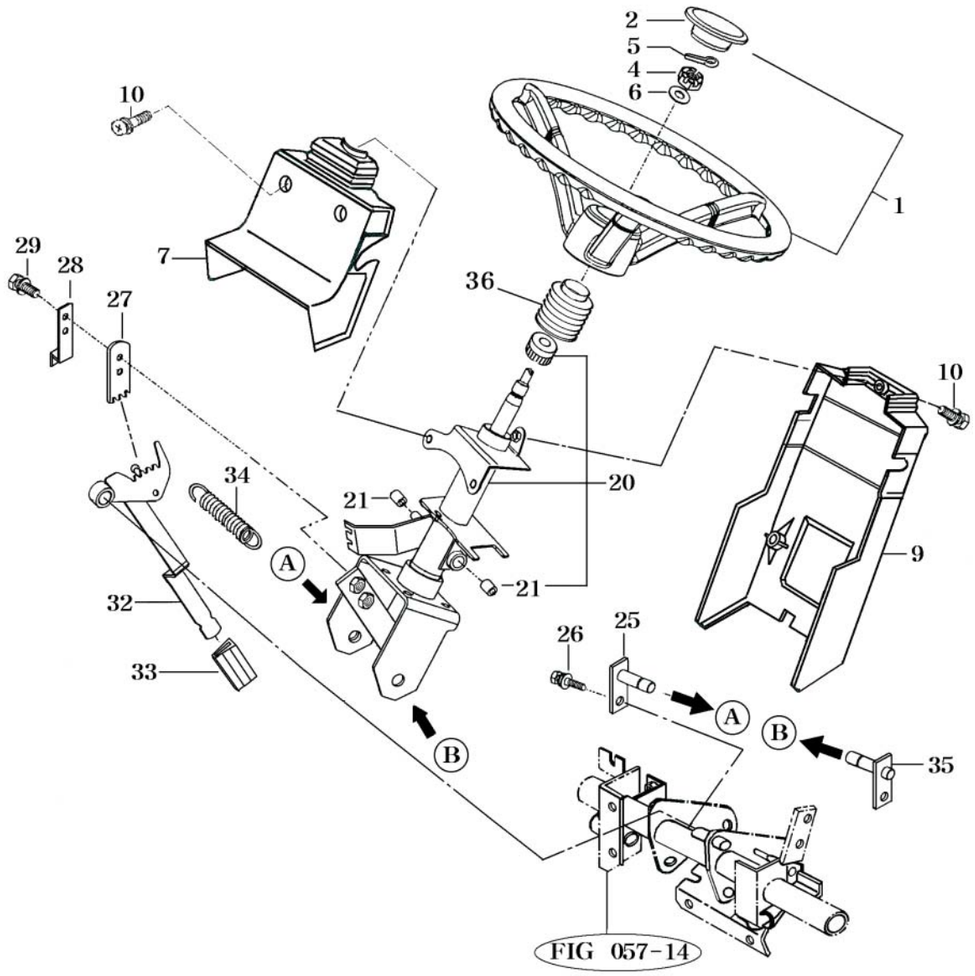

NOTE

FIG 059	STEERING WHEEL	P1	Month / Year
4510C			06 / 2005

KEY NO.		PART NO.	DESCRIPTION	SPEC.	QTY.	REPAIR	EFFECTIVE DATE	REMARKS
059	001	12304012001	WHEEL ASSY , STEERING		1		~2004.12.31	
059	001	12304012002	WHEEL ASSY , STEERING		1		2005.01.01~	
059	002	12304012021	COVER , STEERING		1		~2004.12.31	
059	002	12304012030	COVER , STEERING		1		2005.01.01~	
059	004	V3232600100	NUT , HEX SLOT & CASTLE	M10	1			
059	005	V5001920020	PIN , SPLIT	2X20	1			
059	006	V4111600100	WASHER , PLAIN	M10	1			
059	007	15604010025	COVER , FR COLUMN		1			
059	009	15604010060	COVER , RR COLUMN		1			
059	010	V1222608020	SCREW , C/R PAN/SP	M8X20	5			
059	020	16994043203DG	COLUMN ASSY , STEERING		1			
059	021	36461020111	BUSH , 14X16X20		2			
059	025	15604042101DG	PIN COMP , 16X25		1			
059	026	V2173608016	BOLT , HEX/S	M8X16	2			
059	027	15604040010DG	PLATE		1			
059	028	15184060080DG	PLATE , GUIDE		1			
059	029	V2173608025	BOLT , HEX/S	M8X25	2			
059	032	16754042201DG	PEDAL COMP		1			
059	033	15184060060	COVER , PEDAL		1			
059	034	14041200080	RETURN SPRING , CLUTCH		1			
059	035	16754042100DG	PIN COMP , LH 16X21		1			
059	036	16994011990	BOOT , STEERING		1			

NOTE

FIG 062	STEERING VALVE & CYLINDER	P1	Month/Year
4510C			06 / 2005

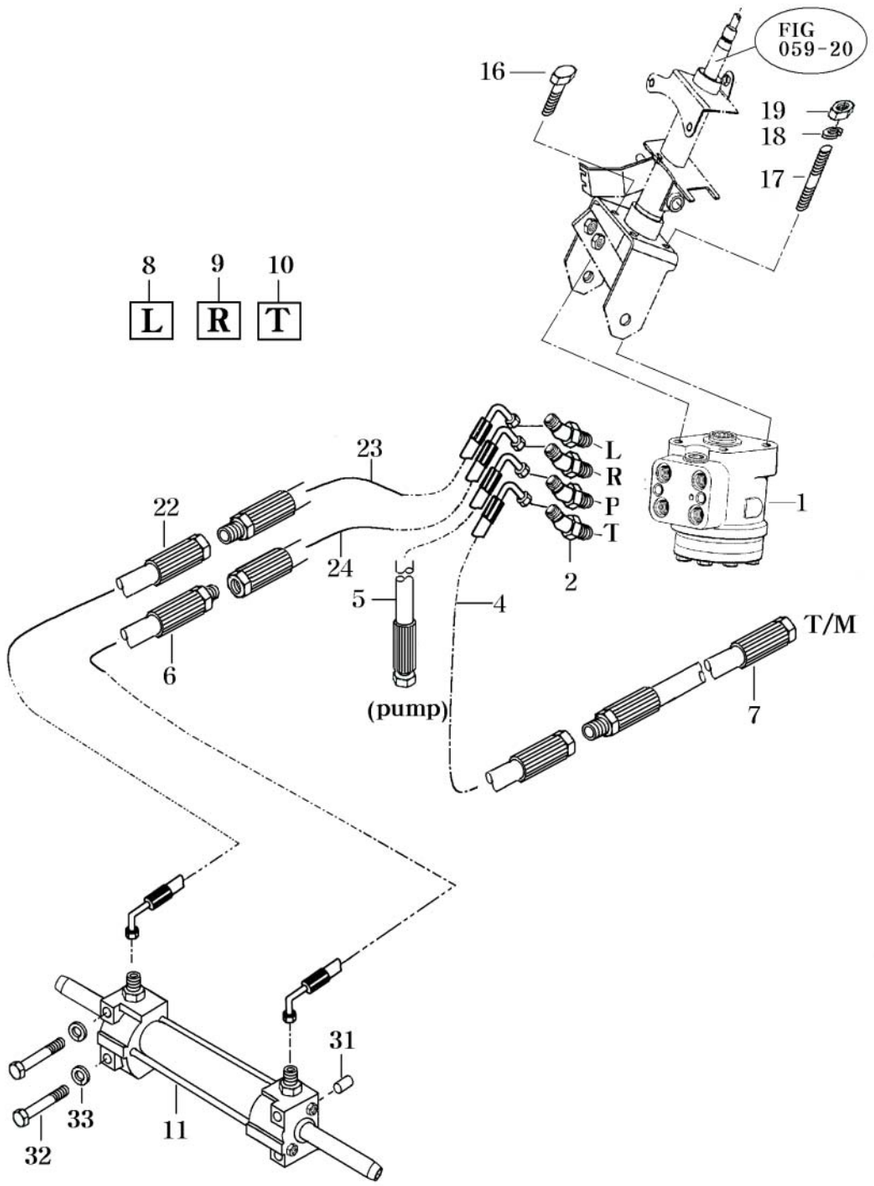

NOTE

FIG 062	STEERING VALVE & CYLINDER	P1	Month / Year
4510C			06 / 2005

KEY NO.		PART NO.	DESCRIPTION	SPEC.	QTY.	REPAIR	EFFECTIVE DATE	REMARKS
062	001	16004072000	VALVE ASSY , STEERING		1	C		
062	002	P1177012600	ELBOW ASS , 45		4			
062	004	15004073501	HOSE ASSY , HYD 90/600		1	C		
062	005	15004072602	HOSE ASSY , HYD 82/470		1	C		
062	006	16744072800	HOSE ASSY . HYD 1170		1	C		
062	007	16754072700	HOSE ASSY , HYD 700		1	C		
062	008	16754070010	LABEL , PORT LH		1			
062	009	16754070020	LABEL , R PORT		1			
062	010	16754070030	LABEL , T PORT		1			
062	011	16704070080	CYLINDER COMP		1	C		
062	016	V2183610025	BOLT , HEX/SP	M10X25	2			
062	017	V2513410020	BOLT , STUD/2	M10X20	2			
062	018	V4011600100	WASHER , SPRING	M10	2			
062	019	V3043600100	NUT , HEX/2	M10	2			
062	022	16024072700	HOSE ASSY , HYD 970		1	C		
062	023	14614072501	HOSE ASSY , HYD 90/450		1	C		
062	024	14614072600	HOSE ASSY , HYD 82/450		1	C		
062	031	V5201010020	PIN , PARALLEL/A	10X20	1			
062	032	V2034612090	BOLT , HEX FINE	M12X90	4			
062	033	V4011600120	WASHER , SPRING	M12	4			

NOTE

FIG 068 4510C	FRONT WHEEL MOUNTING	P1	Month/Year 06 / 2005

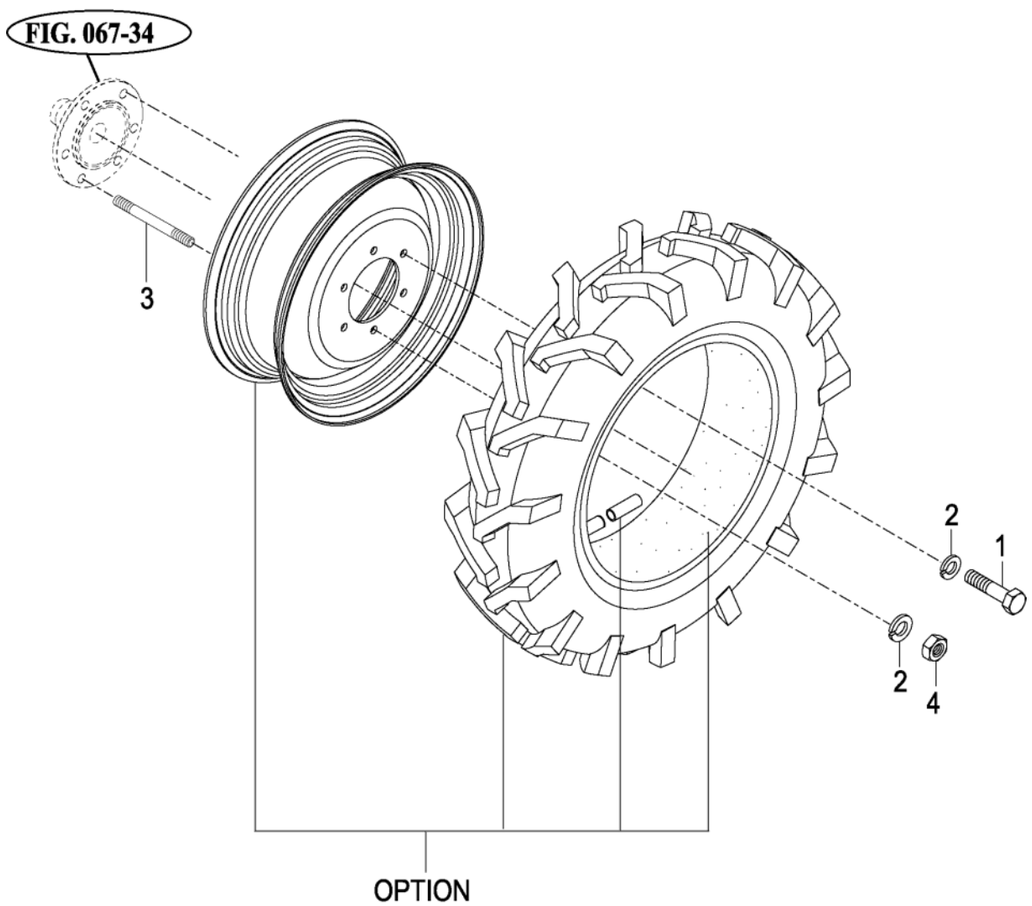

NOTE

FIG 068 4510C	FRONT WHEEL MOUNTING	P1	Month / Year 06 / 2005

KEY NO.		PART NO.	DESCRIPTION	SPEC.	QTY.	REPAIR	EFFECTIVE DATE	REMARKS
068	001	V2013616030	BOLT , HEX	M16X30	8			
068	002	V4011600160	WASHER , SPRING	M16	12			
068	003	15603200010	BOLT , STUD M16X30	D=16	4			
068	004	V3043600160	NUT , HEX/2	M16	4			

NOTE Option

FIG 063	FRONT AXLE BRACKET	P1	Month/Year
4510C			06 / 2005

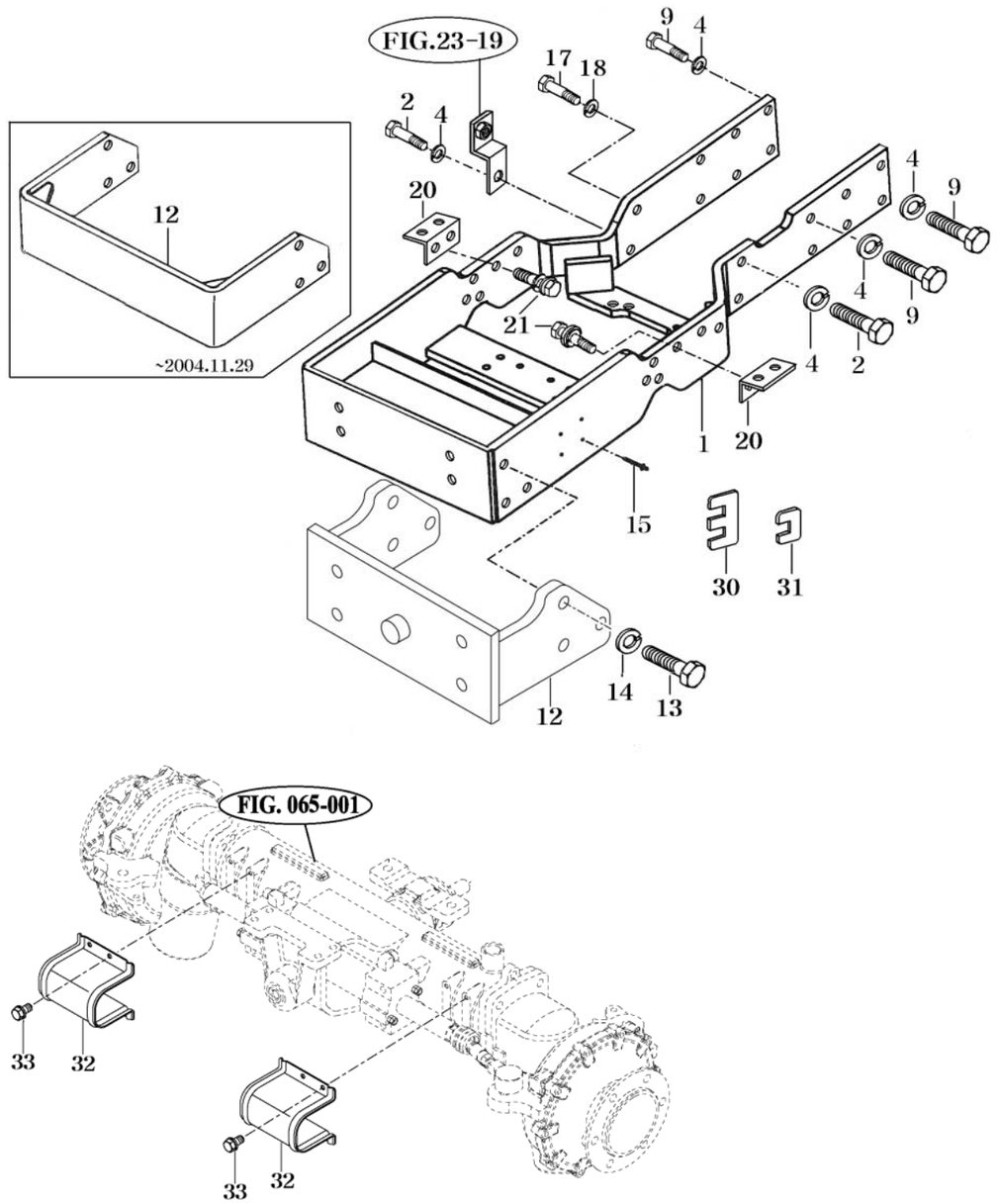

NOTE

FIG 063		P1	Month / Year
4510C			06 / 2005

KEY NO.		PART NO.	DESCRIPTION	SPEC.	QTY.	REPAIR	EFFECTIVE DATE	REMARKS
063	001	16744102201DG	BRACKET COMP . AXLE		1			
063	002	V2023612050	BOLT , HEX FINE	M12X50	3			
063	004	V4011600120	WASHER , SPRING	M12	15			
063	009	V2024612035	BOLT , HEX FINE	M12X35	12			
063	012	16794101000DG	BRACKET COMP , WEIGH		1		~2005.02.27	
063	012	12754101000DG	BRACKET COMP , WEIGH		1		2005.02.28~	
063	013	V2013614035	BOLT , HEX	M14X35	6			
063	014	V4011600140	WASHER , SPRING	M14	6			
063	015	V5502040093	RIVET , BLIND	4X9.3	4			
063	017	V2023610050	BOLT , HEX FINE	M10X50	1			
063	018	V4011600100	WASHER , SPRING	M10	1			
063	020	16004102800DG	STAY COMP , RADIATOR		2			
063	021	V2183608020	BOLT , HEX/SP	M8X20	4		~2006.02.08	
063	021	V2183608025	BOLT , HEX/SP	M8X25	4		2006.02.09~	
063	030	16744100050	SHIM SET , A		2			
063	031	16744100060	SHIM SET , B		2			
063	032	14734070100DG	COVER , CYLINDER		2			
063	033	V2173608016	BOLT , HEX/S	M8X16	8			

NOTE

FIG 064	FRONT DIFFERENTIAL GEARS & SHAFT	P1	Month/Year
4510C			06 / 2005

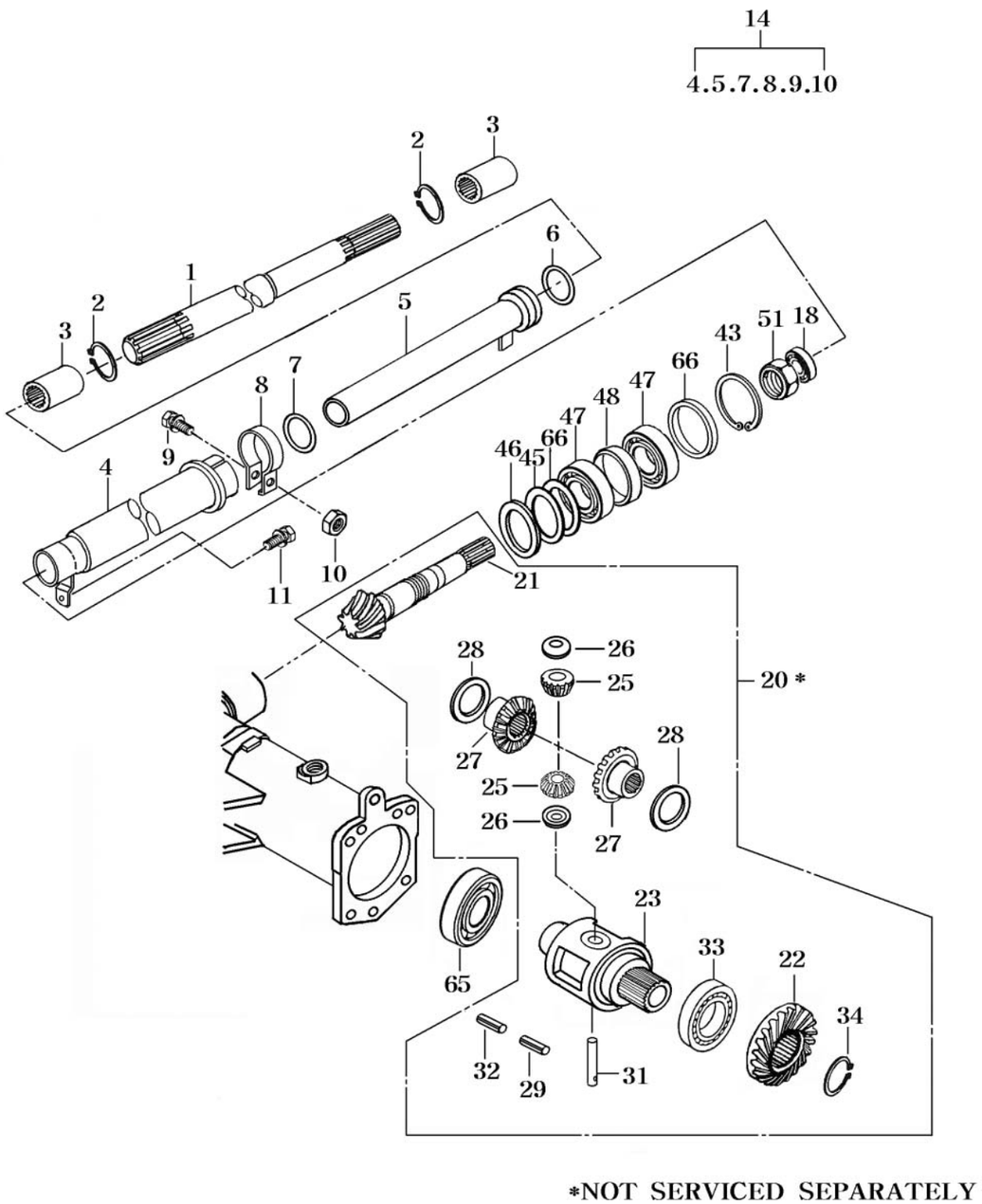

NOTE

FIG 064	FRONT DIFFRENTIAL GEARS & SHAFT	P1	Month / Year
4510C			06 / 2005

KEY NO.		PART NO.	DESCRIPTION	SPEC.	QTY.	REPAIR	EFFECTIVE DATE	REMARKS
064	001	16744310010	SHAFT		1			
064	002	V7041400250	C-RING , SHAFT	25	2			
064	003	14251320150	COUPLING		2			
064	004	16744312000DG	TUBE COMP		1			
064	005	15644312003DG	TUBE COMP		1			
064	006	V7201035038	O-RING , P	P38	1			
064	007	V7201035041	O-RING , P	P41	1			
064	008	14884100031DG	CLAMP		1			
064	009	V2173608040	BOLT , HEX/S	M8X40	1			
064	010	V3042600080	NUT , HEX/2	M8	1			
064	011	V2113606010	BOLT , HEX /S	M6X10	1			
064	014	16744313000	PIPE SUB		1			
064	018	V7441256210	SEAL , OIL/D	D256210	1	B		
064	020	16704112000	DIFF ASSY , FF		1			
064	021	16704112010	PINION , BEVEL 8T		1			
064	022	16704112110	GEAR , BEVEL 35T		1			
064	023	16704310030	CASE , FR DIFF		1			
064	025	16704320020	PINION , DIFF(12)		2			
064	026	14273010050	COLLAR , THRUST		2			
064	027	16704310160	GEAR , DIFF SIDE(20)		2			
064	028	16704320050	WASHER , THRUST		2			
064	029	V5801405025	PIN , SPRING	5X25	1			
064	031	16704110060	SHAFT , DIFF PINION		1			
064	032	V5801403025	PIN , SPRING	3X25	1			
064	033	V6001106212	BEARING , BALL	6212	1			
064	034	17994420060	SNAP RING , C TYPE		1			
064	043	V7051400620	C-RING , HOLE	62	1			
064	045	14254310080	SHIM , A		1			
064	046	14152050160	SHIM , B		1			
064	047	15024320020	BEARING , TAPER ROLLER		2			
064	048	16704112120	COLLAR		1			
064	051	14884110090	NUT , M30		1			
064	065	V6001106211	BEARING , BALL	6211	1			
064	066	16704110121	SHIM		2			

NOTE

FIG 065	FRONT AXLE HOUSING	P1	Month/Year
4510C			06 / 2005

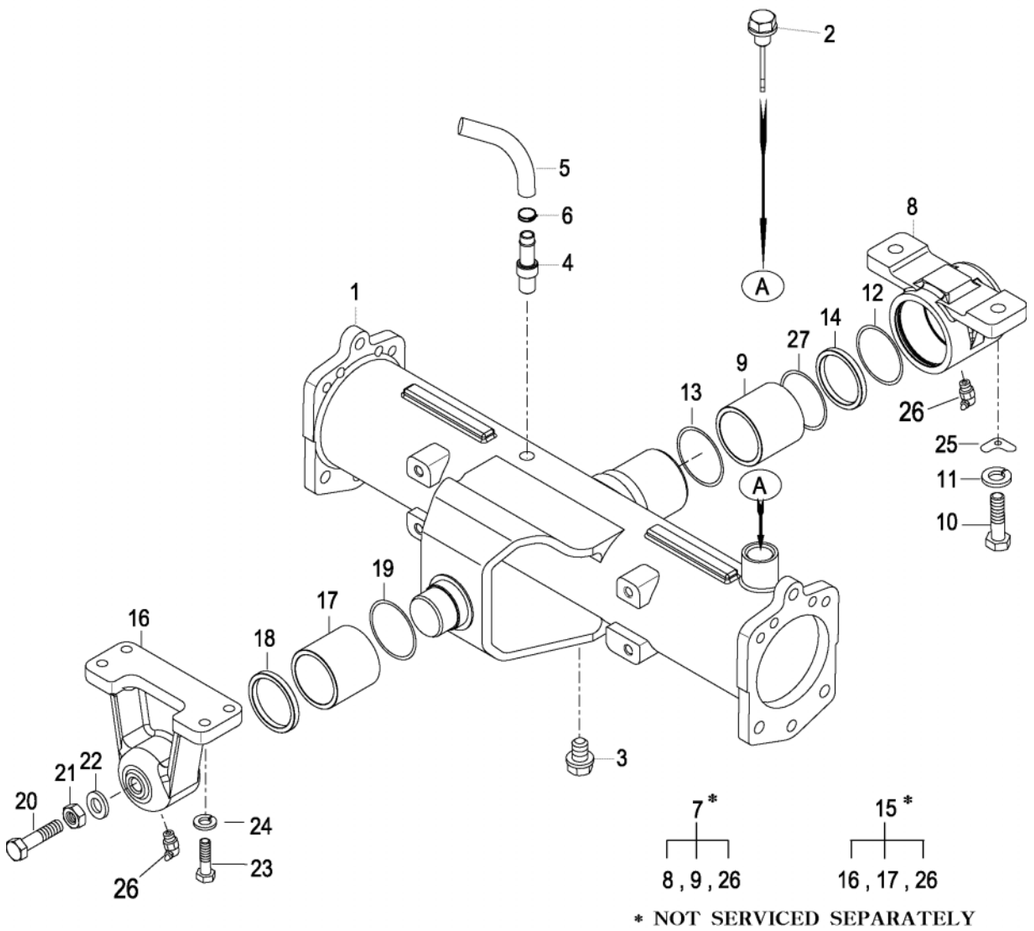

NOTE

FIG 065		P1	Month / Year
4510C			06 / 2005

KEY NO.		PART NO.	DESCRIPTION	SPEC.	QTY.	REPAIR	EFFECTIVE DATE	REMARKS
065	001	14734320011M	HOUSING , FRONT AXLE		1			
065	002	15184072401	CAP ASSY , OIL		1			
065	003	V7811600008	PLUG , SQUARE	R1/2	1			
065	004	17994360221	CONNECTOR		1			
065	005	16991024200	HOSE ASSY , 820		1	C		
065	006	14501410050	CLAMP , WORM 14.5		1			
065	007	16704362201	METAL ASSY , PIVOT		1			
065	008	16704362211M	METAL , PIVOT RR		1			
065	009	16704362221	BUSH , 75X80X30		1	C		
065	010	V2004616040	BOLT , HEX	M16X40	2			
065	011	V4011600160	WASHER , SPRING	M16	2			
065	012	V7201035040	O-RING , P	P40	1	B		
065	013	V7211031080	O-RING G	G80	1	B		
065	014	16704310040	SPACER , R		1			
065	015	16704332101	METAL ASSY , PIVOT		1			
065	016	16704332111M	METAL , PIVOT FR		1			
065	017	16704332220	BUSH , 50X55X20		1	C		
065	018	16704020020	SPACER (F)		1			
065	019	V7211031055	O-RING , G	G55	1	B		
065	020	V2014616050	BOLT , HEX	M16X50	1			
065	021	V3052600160	NUT , HEX/3	M16	1			
065	022	14444120090	WASHER , SEAL		1			
065	023	V2013612040	BOLT , HEX	M12X40	4			
065	024	V4011600120	WASHER , SPRING	M12	4			
065	025	14051060030	WASHER		2			
065	026	V7631500000	NIPPLE , GREASE/B-PT		2			
065	027	V7211031075	O-RING , G	G75	1	B		

NOTE

FIG 066 4510C	FRONT GEAR CASE (1)	P1	Month/Year 06 / 2005

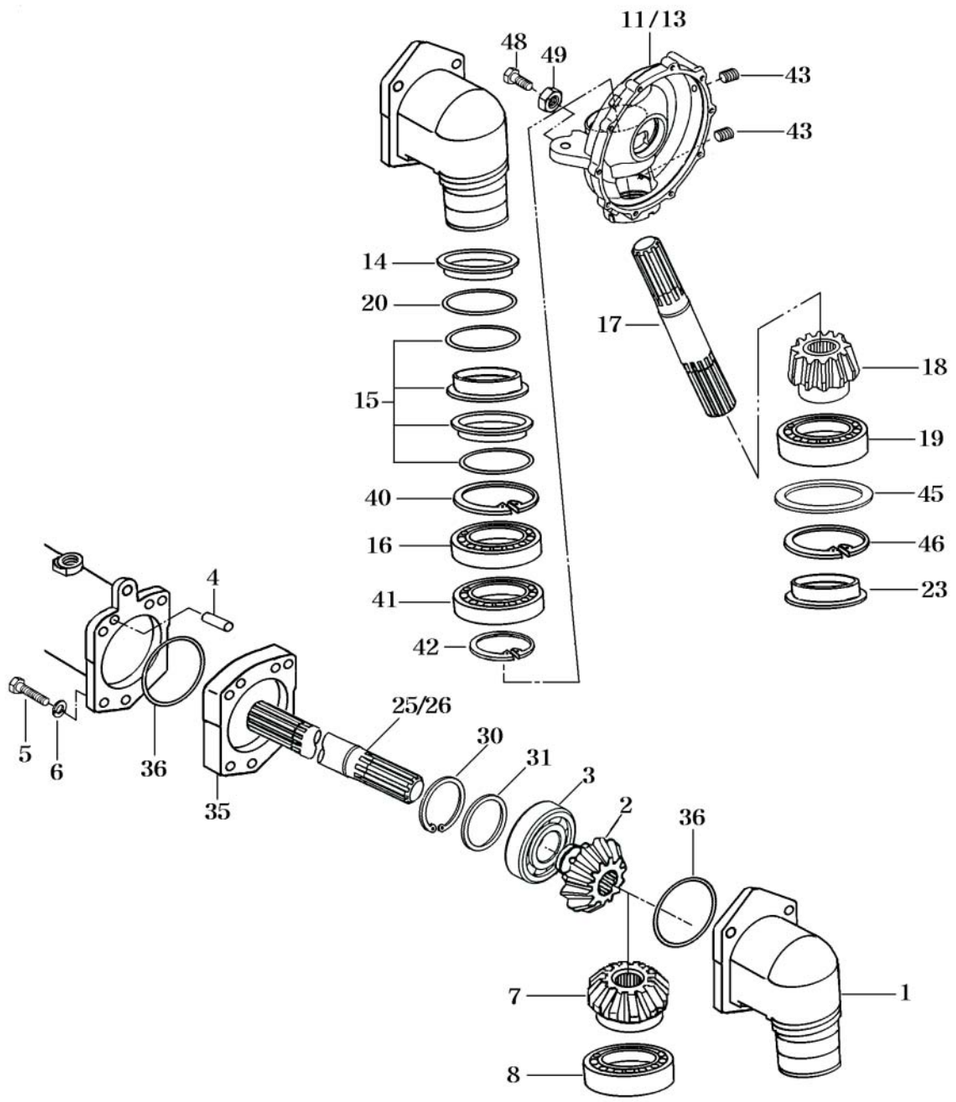

NOTE

FIG 066 4510C	FRONT GEAR CASE (1)	P1	Month / Year 06 / 2005

KEY NO.		PART NO.	DESCRIPTION	SPEC.	QTY.	REPAIR	EFFECTIVE DATE	REMARKS
066	001	16704340010M	CASE , FINAL DRIVE(A)		2			
066	002	16704340020	GEAR , BEVEL 9		2			
066	003	V6041106208	BEARING , BALL/HL1	6208HL1	2			
066	004	V5201012020	PIN , PARALLEL/A	12X20	8			
066	005	V2024614090	BOLT , HEX FINE	M14X90	10			
066	006	V4011600140	WASHER , SPRING	M14	10			
066	007	16704340030	GEAR , BEVEL 16		2			
066	008	V6001106207	BEARING , BALL	6207	2			
066	011	16734342000M	CASE , LH FINAL DRIVE B		2			
066	013	16734342100M	CASE , RH FINAL DRIVE B		1			
066	014	16704130080	HOUSING , SEAL		2			
066	015	16704340040	SEAL ASSY		2	B		
066	016	V6001106014	BEARING , BALL	6014	2			
066	017	16734340050	SHAFT		2			
066	018	16734130080	GEAR , BEVEL 11T		2			
066	019	V6001106308	BEARING , BALL	6308	2			
066	020	V7231020115	O-RING	S115	2	B		
066	023	16704330180	CAP , 90		2	C		
066	025	16734350010	SHAFT , 528		2			
066	026	16734350020	SHAFT , 344		1			
066	030	V7051400800	C-RING , HOLE	80	2			
066	031	16704320030	COLLAR , 68X80X2		2			
066	035	16734340060	SPACER , 47.5		2			
066	036	V7231020110	O-RING , S	S110	4	B		
066	040	V7051400950	C-RING , HOLE	95	2			
066	041	V6001106012	BEARING , BALL	6012	2			
066	042	V7041400600	C-RING , SHAFT	60	2			
066	043	V7811600006	PLUG , SQUARE	R3/8	4			
066	045	16704130060	SHIM , 75X90X2		2			
066	046	V7051400900	C-RING , HOLE	90	2			
066	048	V2014608025	BOLT , HEX	M8X25	2			
066	049	V3042600080	NUT , HEX/2	M8	2			

NOTE

FIG 067	FRONT GEAR CASE (2)	P1	Month/Year
4510C			06 / 2005

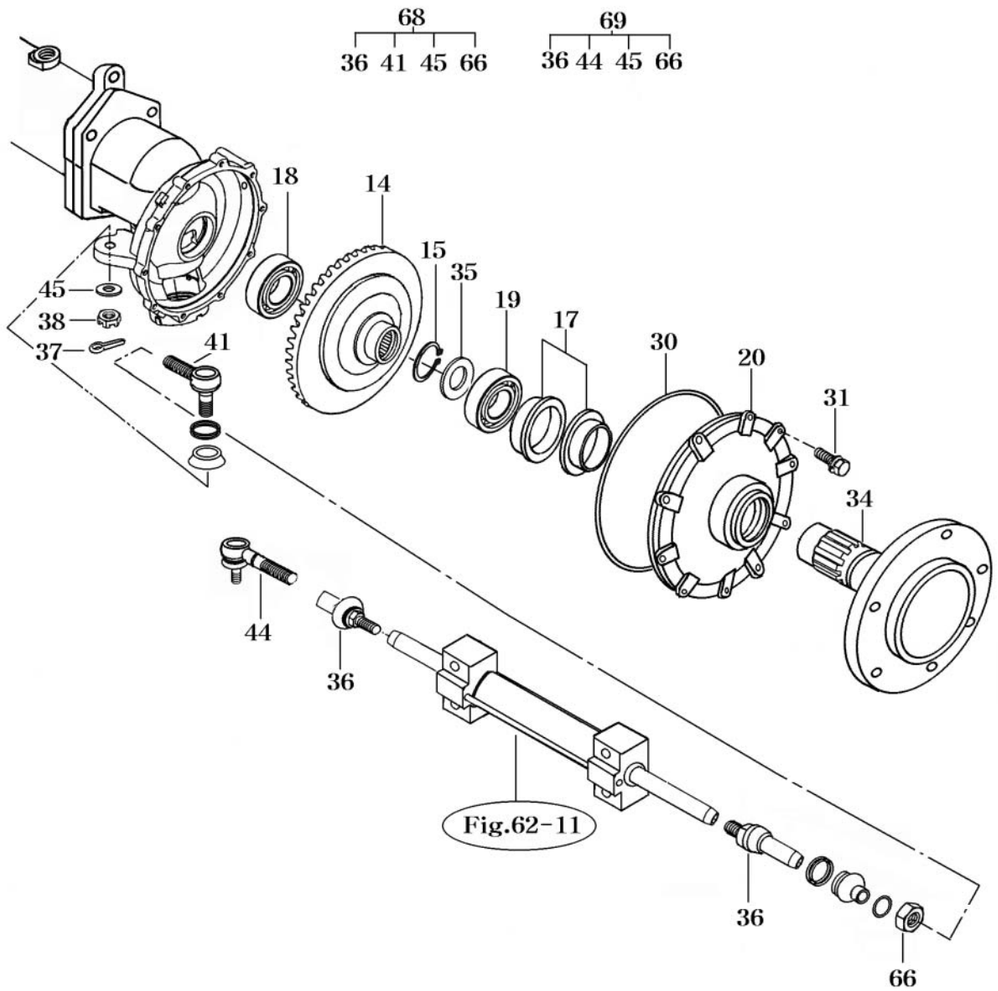

NOTE

FIG 067	FRONT GEAR CASE (2)	P1	Month / Year
4510C			06 / 2005

KEY NO.		PART NO.	DESCRIPTION	SPEC.	QTY.	REPAIR	EFFECTIVE DATE	REMARKS
067	014	16734340080	GEAR , BEVEL 38T		2			
067	015	V7041400500	C-RING , SHAFT	50	2			
067	017	16004340040	SEAL		2	B		
067	018	V6041106208	BEARING , BALL/HL1	6208HL1	2			
067	019	V6001106210	BEARING , BALL	6210	2			
067	020	16704340130M	COVER , WHEEL SHAFT		2			
067	030	16704340150	O RING		2	B		
067	031	V2173608025	BOLT , HEX/S	M8X25	20			
067	034	16704340070	SHAFT , WHEEL		2			
067	035	16709510080	WASHER , 50X60X2		2			
067	036	16734074000	JOINT ASSY , BALL		2	C		
067	037	V3232600140	NUT , HEX SLOT & CASTLE	M14	2			
067	038	V5001932030	PIN , SPLIT	3.2X30	2			
067	041	15264362200	JOINT ASSY , LH		1	C		
067	044	15264363200	JOINT ASSY , RH		1	C		
067	045	V4111600140	WASHER , PLAIN	M14	4			
067	066	V3343600160	NUT , HEX FINE/2	M16	4	C		
067	068	16734074101	JOINT SET , LH BALL		1	C		
067	069	16734074201	JOINT SET , RH BALL		1	C		

NOTE

FIG 061 4510C	GEAR PUMP	P1	Month/Year 06 / 2005

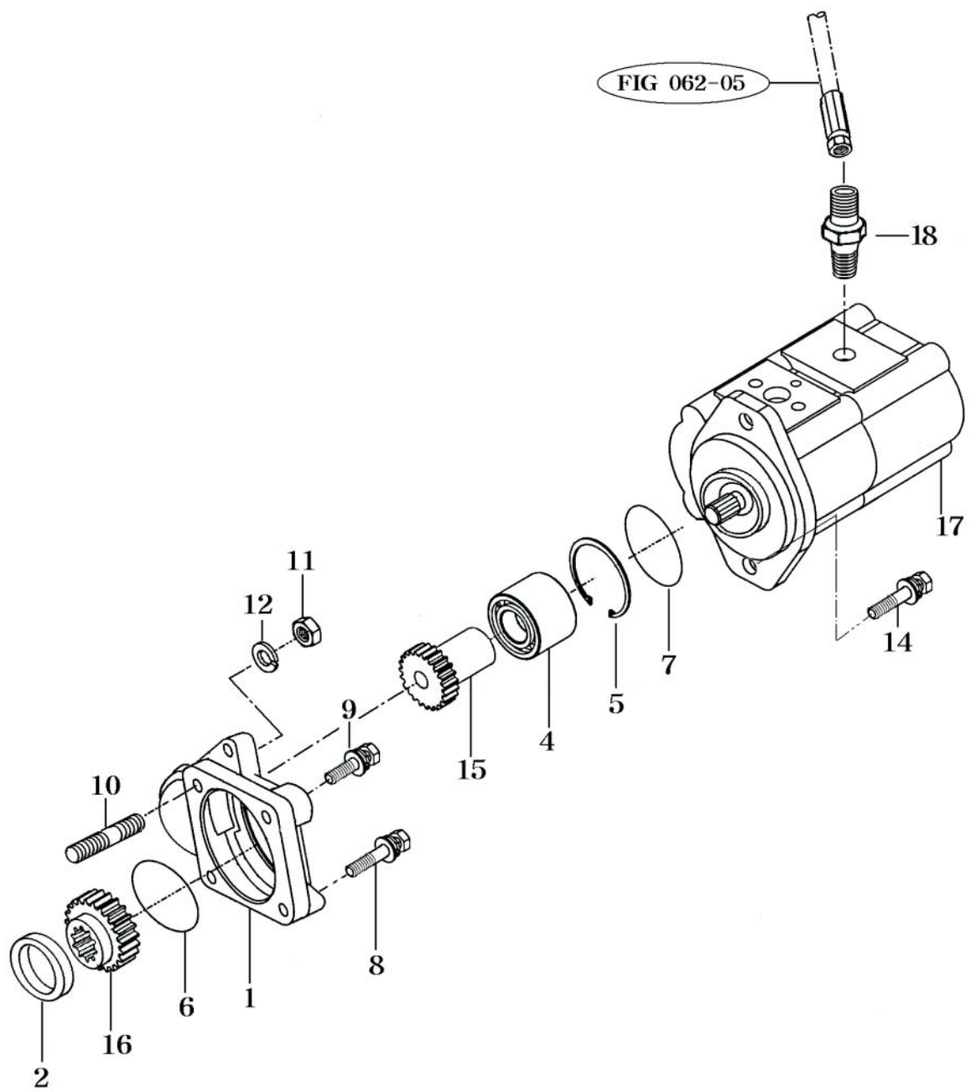

NOTE

FIG 061 4510C	GEAR PUMP	P1	Month / Year 06 / 2005

KEY NO.		PART NO.	DESCRIPTION	SPEC.	QTY.	REPAIR	EFFECTIVE DATE	REMARKS
061	001	14553403611M	HOLDER , PUMP		1			
061	002	15003701000	COLLAR		1			
061	004	V6061105205	BEARING , BALL SELF-ALIGNING	5205	1			
061	005	V7041400250	C-RING , SHAFT	25	1			
061	006	V7231020085	O-RING , S	S85	1	B		
061	007	V7231020080	O-RING , S	S80	1	B		
061	008	V2013608045	BOLT , HEX	M8X45	2			
061	009	V2173608020	BOLT , HEX/S	M8X20	1			
061	010	V2512608025	BOLT , STUD/2	M8X25	1			
061	011	V3043600080	NUT , HEX/2	M8	1			
061	012	V4011600080	WASHER , SPRING	M8	1			
061	014	V2024610030	BOLT , HEX FINE	M10X30	2			
061	015	16303910020	GEAR , PUMP DRIVE 17T		1			
061	016	14553910010	GEAR , PUMP DRIVE 34T		1			
061	017	14614075002	PUMP ASSY.GEAR		1	C		
061	018	36313530081	ADAPTER , HIGH-PRESSURE		1			

NOTE

FIG 069	CYLINDER CASE	P1	Month/Year
4510C			06 / 2005

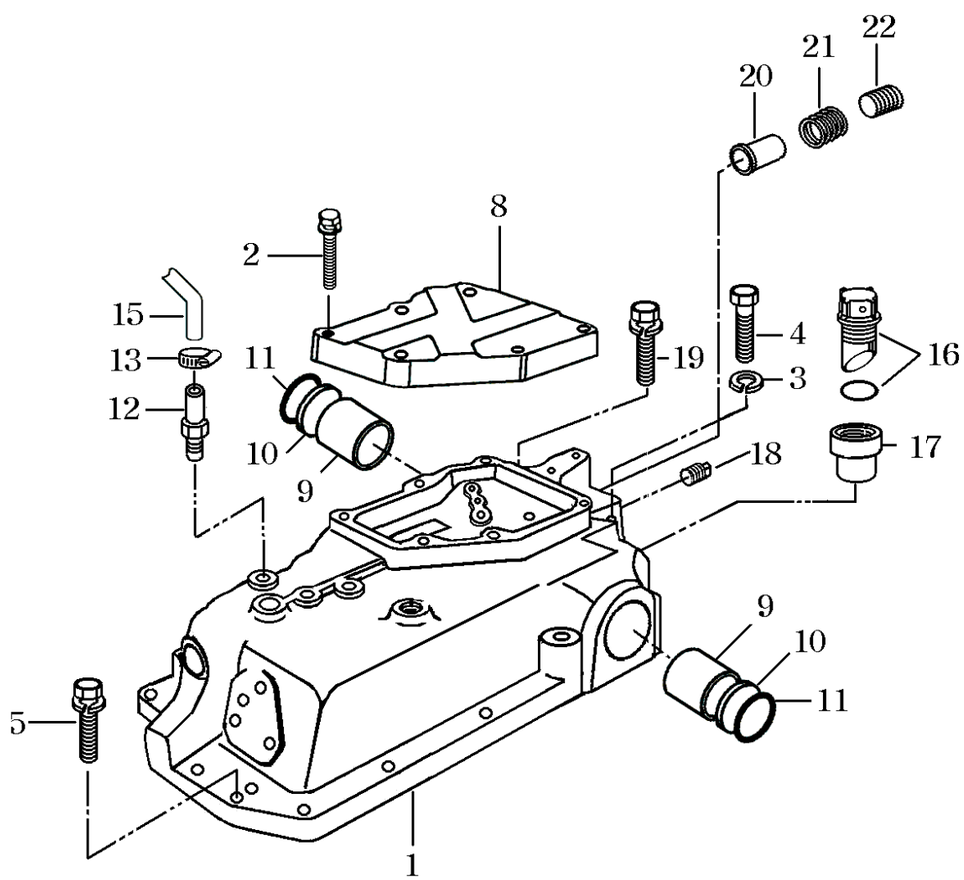

NOTE

FIG 069	CYLINDER CASE	P1	Month / Year
4510C			06 / 2005

KEY NO.		PART NO.	DESCRIPTION	SPEC.	QTY.	REPAIR	EFFECTIVE DATE	REMARKS
069	000	17995019100	CASE ASSY. CYLINDER		1			
069	001	17995010013M	CASE , CYLINDER		1			
069	002	V2173608040	BOLT , HEX/S	M8X40	6			
069	003	V4011600100	WASHER , SPRING	M10	4			
069	004	V2013610070	BOLT , HEX	M10X70	4			
069	005	V2173610035	BOLT , HEX/S	M10X35	9			
069	008	17995010081M	COVER , MAIN CONTROL VALVE		1			
069	009	17995050090	BUSH , 50X55X40		2	C		
069	010	V7212031055	O-RING , G	G55	2	B		
069	011	17995010110	RING		2	B		
069	012	17994360221	CONNECTOR		1			
069	013	14501410050	CLAMP , WORM 14.5		1			
069	015	17995010150	HOSE . 500		1	C		
069	016	15184322500	CAP ASSY , OIL		1			
069	017	15975010011M	COLLAR , 24X38X45		1			
069	018	V7801000004	PLUG , HEX-SOCKET	R1/4	5			
069	019	V2173610065	BOLT , HEX/S	M10X65	1			
069	020	12305180020	FILTER , 80 MESH		1	B		
069	021	17995010210	SPRING		1			
069	022	17995010220	PLUG , PT1/2		1			

NOTE

FIG 070 4510C	LIFT ARM	P1	Month/Year 06 / 2005

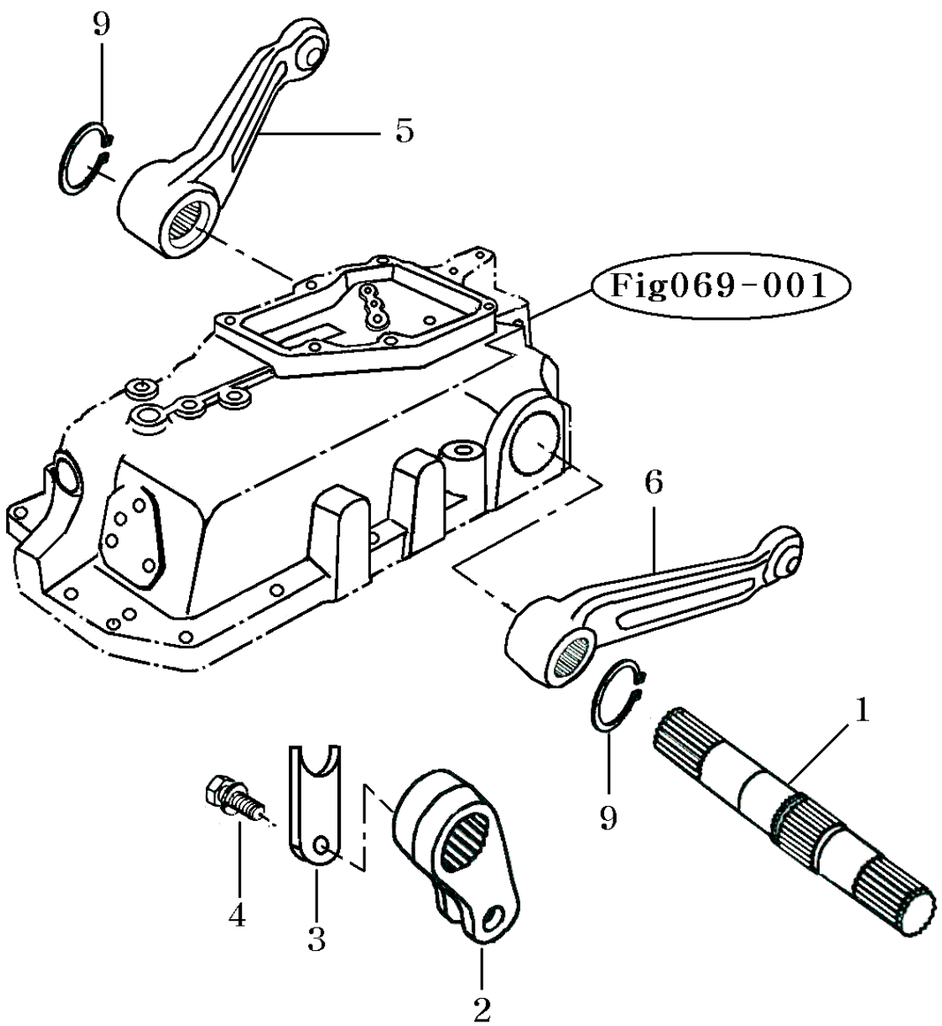

NOTE

FIG 070 4510C	LIFT ARM	P1	Month / Year 06 / 2005

KEY NO.		PART NO.	DESCRIPTION	SPEC.	QTY.	REPAIR	EFFECTIVE DATE	REMARKS
070	001	17995020010M	BAR		1			
070	002	17995020021M	LIFT , CRANK		1			
070	003	17995020030	PLATE		1			
070	004	V2173608016	BOLT , HEX/S	M8X16	1			
070	005	17995020200M	ARM ASSY , LIFT		1			
070	006	17995020200M	ARM ASSY , LIFT		1			
070	009	V7041400480	C-RING , SHAFT	48	2			

NOTE

FIG 071	CYLINDER	P1	Month/Year
4510C			06 / 2005

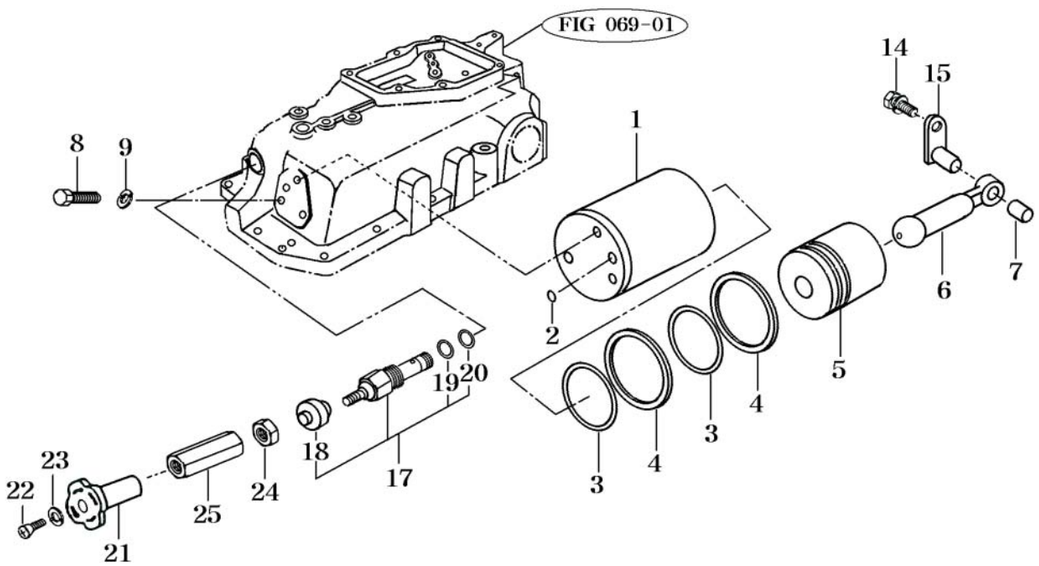

NOTE

FIG 071	CYLINDER	P1	Month / Year
4510C			06 / 2005

KEY NO.		PART NO.	DESCRIPTION	SPEC.	QTY.	REPAIR	EFFECTIVE DATE	REMARKS
071	001	17995030010M	CYLINDER COMP		1			
071	002	V7201124014	O-RING , P	P14	1	B		
071	003	17995030030	O-RING		2	B		
071	004	17995030040	RING		2	B		
071	005	17995030050M	PISTON , HYD		1	C		
071	006	17995030060M	ROD , PISTON		1			
071	007	17995030070	BUSH		1			
071	008	V2024612050	BOLT , HEX FINE	M12X50	3			
071	009	V4011600120	WASHER , SPRING	M12	3			
071	014	V2173608016	BOLT , HEX/S	M8X16	1			
071	015	17995031500	PIN COMP , HYD		1			
071	017	15640040000	VALVE , SUB FLOW CONTROL		1	C		
071	018	K2310040070	SEAL , DUST	DKI11217	1			
071	019	V7201124022	O-RING , P	P22	1	B		
071	020	V7201124016	O-RING , P	P16	1	B		
071	021	15605070070	KNOB , SLOW RETURN		1			
071	022	V1112606040	SCREW , C/R PAN	M6X40	1			
071	023	V4011600060	WASHER , SPRING	M6	1			
071	024	V3042600100	NUT , HEX/2		1			
071	025	17405070130	SHAFT . SLOW RETURN		1			

NOTE

FIG 073 4510C	POSITION LINK	P1	Month/Year 06 / 2005

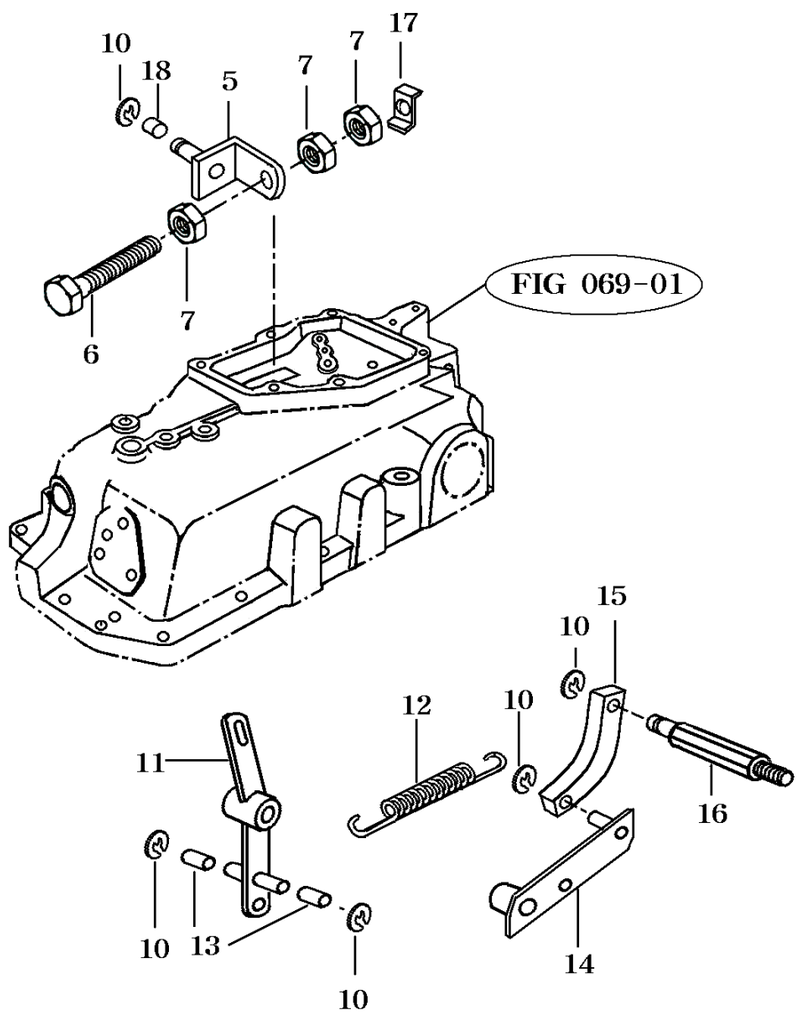

NOTE

FIG 073 4510C	POSITION LINK	P1	Month / Year 06 / 2005

KEY NO.		PART NO.	DESCRIPTION	SPEC.	QTY.	REPAIR	EFFECTIVE DATE	REMARKS
073	005	17995040011	CLEVIS COMP		1			
073	006	V2013608050	BOLT , HEX	M8X50	1			
073	007	V3043600080	NUT , HEX/2	M8	3			
073	010	V7081400060	E-RING	6	5			
073	011	17995041100	LINK COMP , VALVE		1			
073	012	17995040121	SPRING		1			
073	013	17995040130	ROLLER		2			
073	014	17995041400	ARM , COMP , LINK		1			
073	015	17995040150	LINK , CRANK LIFT		1			
073	016	17995040160	PIN , LINK		1			
073	017	17995040170	WASHER , LOCK		1			
073	018	17995040140	ROLLER		1			

NOTE

FIG 075 4510C	CONTROL VALVE	P1	Month/Year 06 / 2005

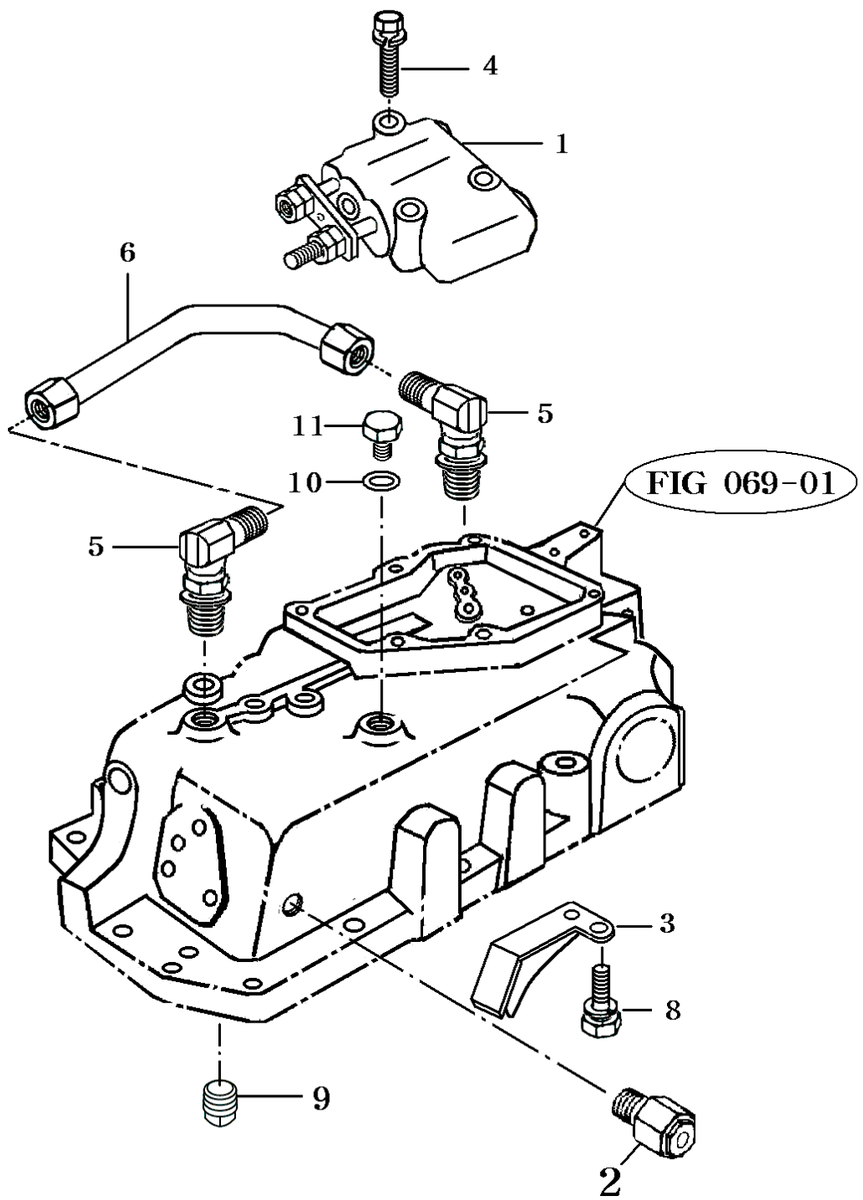

NOTE

FIG 075 4510C	CONTROL VALVE	P1	Month / Year 06 / 2005

KEY NO.		PART NO.	DESCRIPTION	SPEC.	QTY.	REPAIR	EFFECTIVE DATE	REMARKS
075	001	17995050100	VALVE ASSY , MAIN CONTROL		1	C		
075	002	17680070000	VALVE ASSY . RELIEF		1	C		
075	003	17995050030	GUIDE OIL		1			
075	004	V2173608045	BOLT , HEX/S	M8X45	3			
075	005	16735304100	ELBOW , 90		2			
075	006	16735050601	PIPE , CYLINDER		1			
075	008	V2173608016	BOLT , HEX/S	M8X16	2			
075	009	V7811600006	PLUG , SQUARE		1			
075	010	V7201024011	O-RING , P		1			
075	011	76500800100	PLUG , HEX		1			

NOTE

FIG 076 4510C	DRAFT LINK	P1	Month/Year 06 / 2005

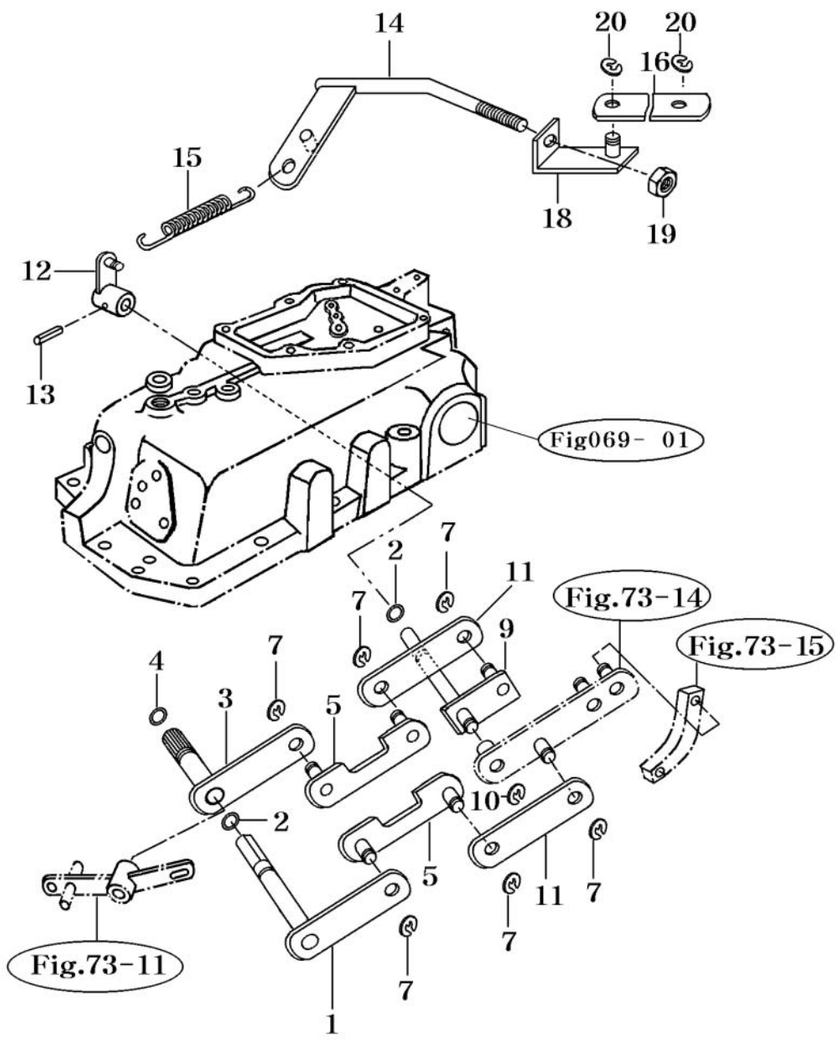

NOTE

FIG 076 4510C	DRAFT LINK	P1	Month / Year 06 / 2005

KEY NO.		PART NO.	DESCRIPTION	SPEC.	QTY.	REPAIR	EFFECTIVE DATE	REMARKS
076	001	17995041500	SHAFT COMP , POSITION		1			
076	002	V7201019009	O-RING , P	P9	2	B		
076	003	17995041200	SHAFT COMP , DRAFT		1			
076	004	V7201024016	O-RING , P	P16	1	B		
076	005	17995060050	LINK COMP , B		2			
076	007	V7081400060	E-RING	6	6			
076	009	17995061300	ARM , COMP , IN , LINK		1			
076	010	V7081400090	E-RING	9	1			
076	011	17995060060	LINK		2		~2005.10.30	
076	011	17995060061	LINK		2		2005.10.31~	
076	012	17995060120	ARM , OUT , LINK		1			
076	013	V5801404018	PIN , SPRING	4X18	1			
076	014	16735061400	ROD , A		1			
076	015	17995060150	SPRING		1			
076	016	17995060160	LINK , A	25X6T	1			
076	018	17995061800	LINK COMP , B		1			
076	019	V3043600080	NUT , HEX/2	M8	3			
076	020	V7081400080	E-RING	8	2			

NOTE

FIG 077 4510C	POSITION & DRAFT LEVER	P1	Month/Year 06 / 2005

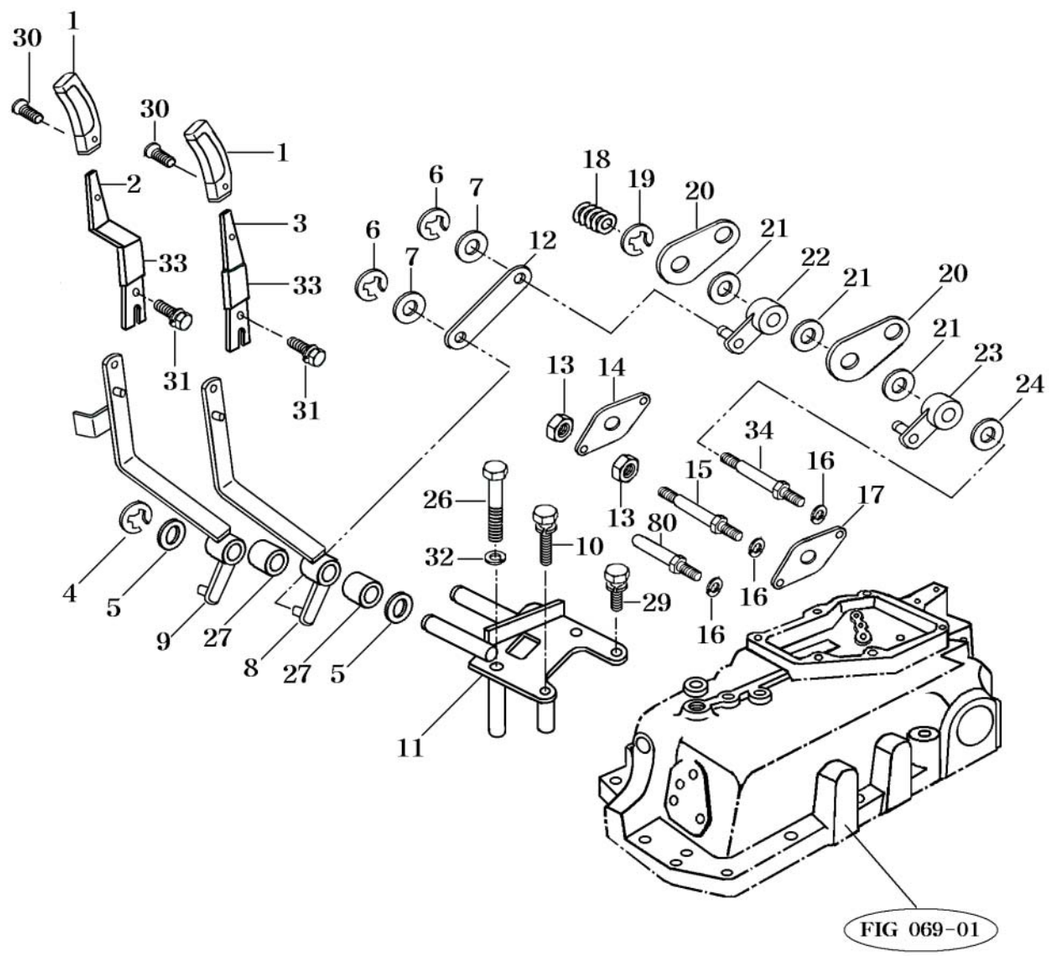

NOTE

FIG 077 4510C	POSITION & DRAFT LEVER	P1	Month / Year 06 / 2005

KEY NO.		PART NO.	DESCRIPTION	SPEC.	QTY.	REPAIR	EFFECTIVE DATE	REMARKS
077	001	15605110054	GRIP , 3X17X97		2			
077	002	12405120034DG	LEVER , PLATE		1			
077	003	15645120032DG	LEVER , PLATE		1			
077	004	V7081400120	E-RING	12	1			
077	005	V4111600160	WASHER , PLAIN	M16	2			
077	006	V7081400080	E-RING	8	4			
077	007	V4111600100	WASHER , PLAIN	M10	4			
077	008	16735070080	LINK COMP , LIFT 1		1			
077	009	16735070090	LINK COMP , LIFT 2		1			
077	010	V2173608050	BOLT . HEX/S	M8X50	1			
077	011	16735071100	PIN COMP , LINK		1		~2004.09.30	
077	011	16735071101	PIN COMP , LINK		1		2004.10.01~	
077	012	16735070120	LINK , CONNECT		2			
077	013	V3043600100	NUT , HEX/2	M10	4			
077	014	17995070140	PLATE , C		1			
077	015	17995070150	BOLT , SUPPORT		1			
077	016	V4011600100	WASHER , SPRING	M10	3			
077	017	17995070170	PLATE , D		1			
077	018	17995070180	SPRING		1			
077	019	V7081400120	E-RING	12	1			
077	020	17995070200	PLATE , A		2			
077	021	17995070211	PLATE , FRICTION		3			
077	022	17995070220	ARM , COMP , POSITION LEVER		1			
077	023	17995072300	ARM , COMP , DRAFT LEVER		1			
077	024	17995070241	PLATE , FRICTION		1			
077	026	V2013608110	BOLT , HEX	M8X110	1			
077	027	17995070270	BUSH , 16X18X33		2			
077	029	V2173608020	BOLT , HEX/S	M8X20	2			
077	030	V1122605012	SCREW , C/R FLAT	M5X12	2			
077	031	V2173608012	BOLT , HEX/S	M8X12	2			
077	032	V4011600080	WASHER , SPRING	M8	1			
077	033	15603160025	TUBE , STRAIGHT 80		2			
077	034	17995070340	BOLT , SUPPORT		1			
077	080	17995070800	BOLT , STOP		1			

NOTE

FIG 081	HYDRAULIC PIPE (1)	P1	Month/Year
4510C			06 / 2005

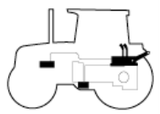

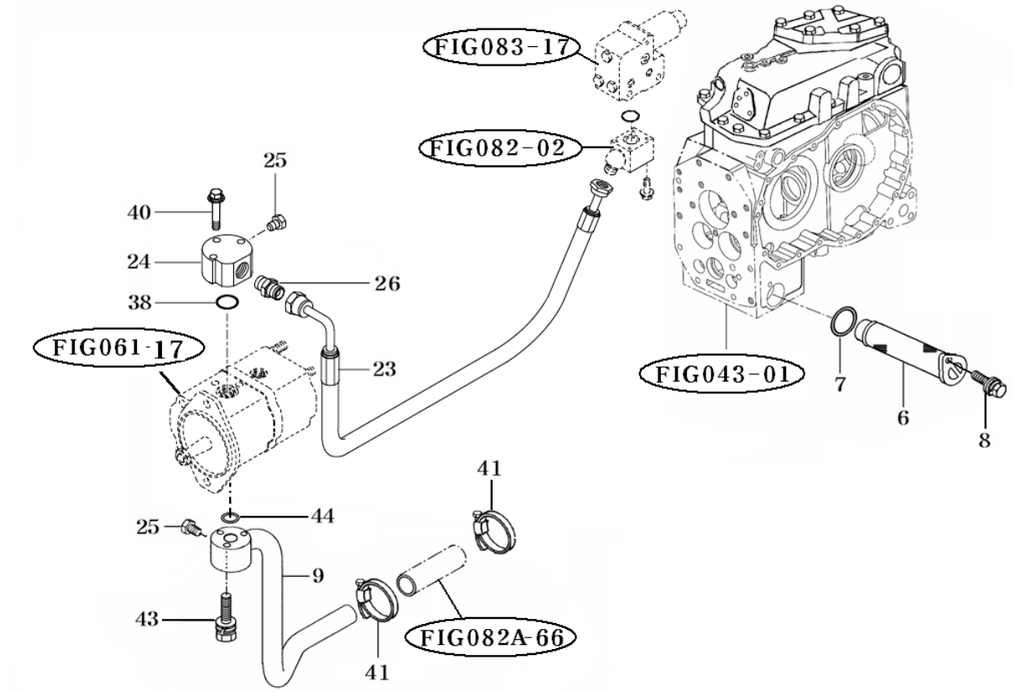

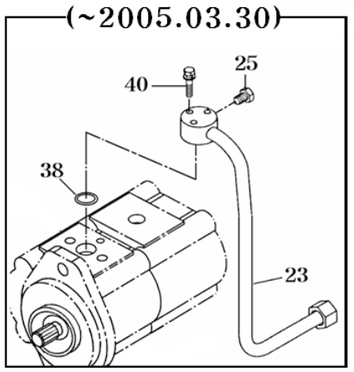

NOTE

FIG 081		P1	Month / Year
4510C			06 / 2005

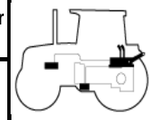

KEY NO.		PART NO.	DESCRIPTION	SPEC.	QTY.	REPAIR	EFFECTIVE DATE	REMARKS
081	006	15645153000	FILTER , SUCTION HYD		1	B		
081	007	V7211031045	O-RING , G	G45	1	B		
081	008	V2183610025	BOLT , HEX/SP	M10X25	1			
081	009	12405152500DG	PIPE COMP , INLET		1		~2005.05.31	
081	009	16582632602DG	PIPE COMP , INLET		1		2005.06.01~	
081	023	12405152200DG	PIPE COMP , FR DELIV		1		~2005.03.30	
081	023	16735100070	HOSE , HYD 840		1		2005.03.31~	
081	024	16735100010	FLANGE		1		2005.03.31~	
081	025	13267060022	PLUG , DRAIN		2			
081	026	16735100020	ADAPTER . PF 1/2		1		2005.03.31~	
081	038	V7201124020	O-RING , P	P20	1	B		
081	040	V2173608040	BOLT , HEX/S	M8X40	3		~2005.03.30	
081	040	V2173608045	BOLT , HEX/S	M8X45	3		2005.03.31~	
081	041	14445100080	CLAMP . HOSE		1		~2005.05.31	
081	041	14801020070	CLAMP . HOSE		1		2005.06.01~	
081	043	V2173608055	BOLT , HEX/S	M8X55	2			
081	044	V7201124022	O-RING , P	P22	1	B		

NOTE

FIG 082 4510C	HYDRAULIC PIPE (2)-DRUM TYPE	P1	Month/Year 06 / 2005

(DRUM TYPE ~2005.5.31)

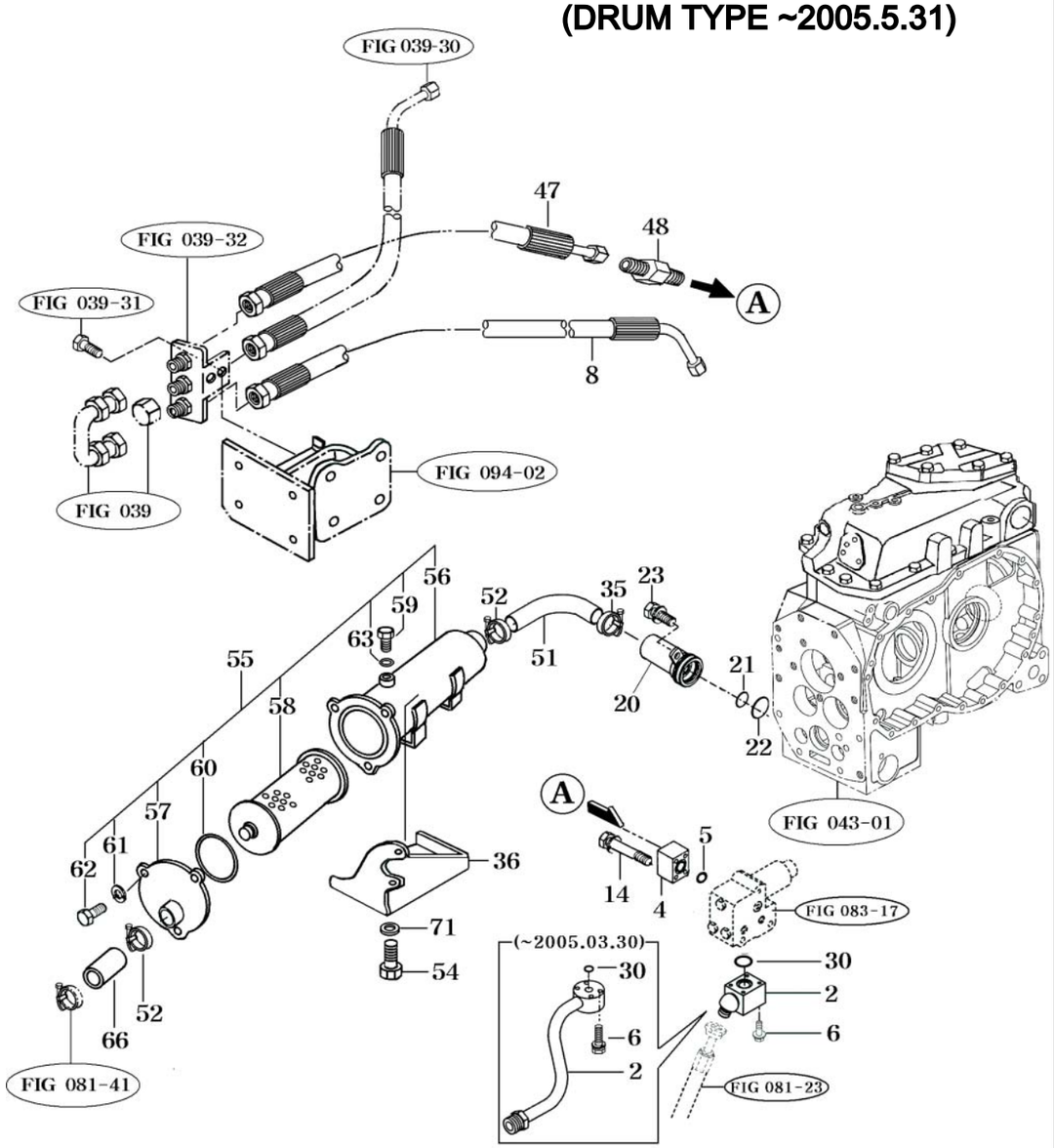

NOTE

FIG 082 4510C	HYDRAULIC PIPE (2)-DRUM TYPE	P1	Month / Year 06 / 2005

KEY NO.		PART NO.	DESCRIPTION	SPEC.	QTY.	REPAIR	EFFECTIVE DATE	REMARKS
082	002	15685152603	PIPE COMP , DELIVERY		1		~2005.03.30	
082	002	16735102200	FLANGE COMP		1		2005.03.31~2005.05.31	
082	004	15605150015	CONNECTOR		1		~2005.05.31	
082	005	V7201124020	O-RING , P	P20	1	B	~2005.05.31	
082	006	V2113606035	BOLT , HEX /S	M6X35	4		~2005.03.30	
082	006	V2113606040	BOLT , HEX /S	M6X40	4		2005.03.31~2005.05.31	
082	008	16745152330	HOSE ASSY , HYD 1900		1	C	~2005.05.31	
082	014	V2113606035	BOLT , HEX /S	M6X35	4		~2005.05.31	
082	020	15265152301	PIPE COMP , RR SUCTION		1		~2005.05.31	
082	021	V7211031035	O-RING , G	G35	1	B	~2005.05.31	
082	022	V7211031045	O-RING , G	G45	1	B	~2005.05.31	
082	023	V2173610020	BOLT , HEX/S	M10X20	1		~2005.05.31	
082	030	V7201124014	O-RING , P	P14	1	B	~2005.03.30	
082	030	V7201124020	O-RING , P	P20	1	1	2005.03.31~2005.05.31	
082	035	14801020070	CLAMP , 40		1		~2005.05.31	
082	036	15265152002DG	BRACKET COMP , FILTE		1		~2005.05.31	
082	047	15004070010	HOSE ASSY , HYD 470		1	C	~2005.05.31	
082	048	15005152380	UNION		1		~2005.05.31	
082	051	15265150020	HOSE		1		~2005.05.31	
082	052	14241010050	CLIP , 42		2		~2005.05.31	
082	054	V2173608025	BOLT , HEX/S	M8X25	4		~2005.05.31	
082	055	15005153000DG	FILTER ASSY , SUCTIO		1		~2005.05.31	
082	056	15015082412	CASE COMP		1		~2005.05.31	
082	057	15015082422	COVER		1		~2005.05.31	
082	058	15005153010	ELEMENT		1	A	~2005.05.31	
082	059	14869352050	PLUG , DRAIN		1		~2005.05.31	
082	060	V7211031140	O-RING , G	G140	1	B	~2005.05.31	
082	061	V4011600100	WASHER , SPRING	M10	6		~2005.05.31	
082	062	V2012610025	BOLT , HEX	M10X25	6		~2005.05.31	
082	063	V7201019008	O-RING , P	P8	1	B	~2005.05.31	
082	066	16495100010	HOSE		1		~2005.05.31	
082	071	35602010150	WASHER , BIND SHAFT		4		~2005.05.31	

NOTE

FIG 082A 4510C	HYDRAULIC PIPE (2)-SPIN ON TYPE	P1	Month/Year 06 / 2005

(SPIN-ON TYPE 2005.06.01~)

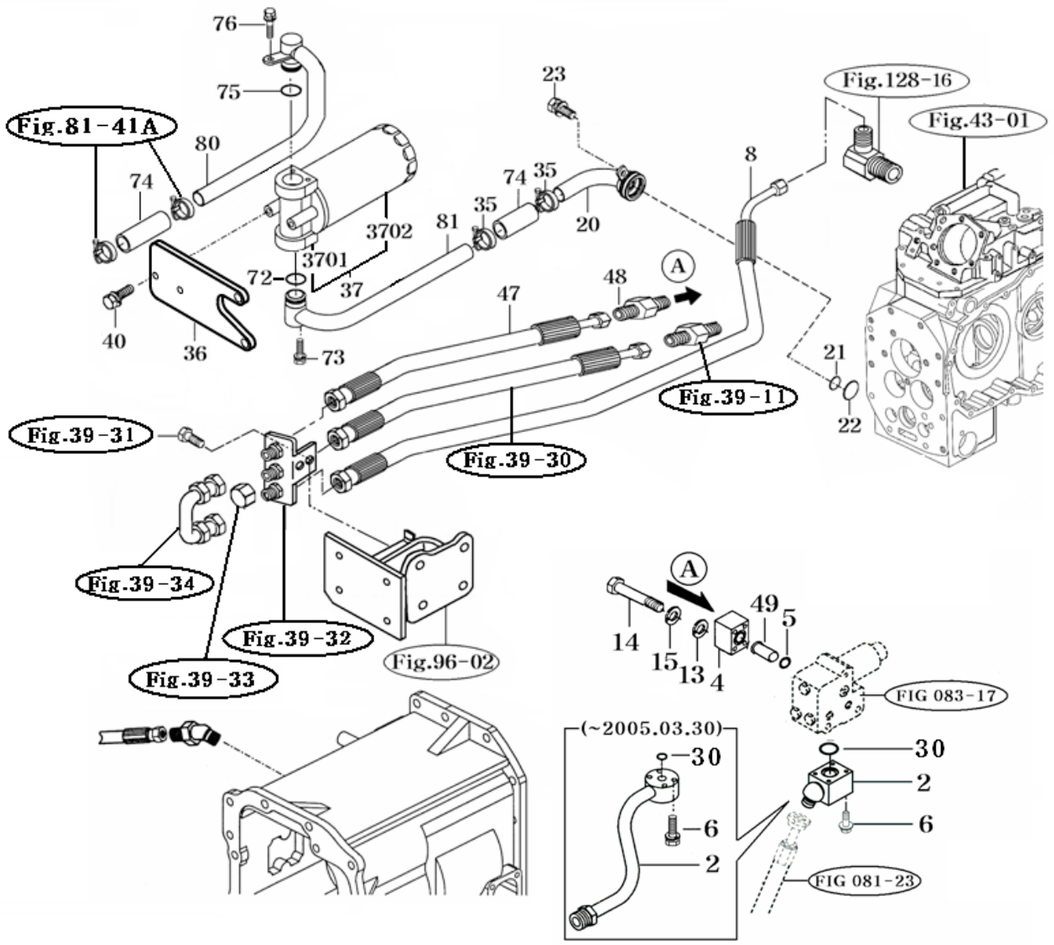

NOTE

FIG 082A 4510C	HYDRAULIC PIPE (2)-SPIN ON TYPE	P1	Month / Year 06 / 2005

KEY NO.	PART NO.	DESCRIPTION	SPEC.	QTY.	REPAIR	EFFECTIVE DATE	REMARKS
082A 002	15685152603	PIPE COMP , DELIVERY		1		~2005.03.30	
082A 002	16735102200	FLANGE COMP		1		2005.06.01~	
082A 004	12305180010	FLANGE		1		2005.06.01~	
082A 005	V7201124020	O-RING , P	P20	1		2005.06.01~	
082A 006	V2113606035	BOLT , HEX /S	M6X36	4		~2005.03.30	
082A 006	V2113606040	BOLT , HEX /S	M6X40	4		2005.06.01~	
082A 008	17995152330	HOSE ASSY , HYD 1600		1		2005.06.01~	
082A 014	V2053606050	BOLT , HEX C/R		4		2005.06.01~	
082A 015	V4011600060	WASHER , SPRING	M6	4		2005.06.01~	
082A 020	12305152300	PIPE COMP , RR SUCTION		1		2005.06.01~	
082A 021	V7211031035	O-RING , G	G35	1		2005.06.01~	
082A 022	V7211031045	O-RING , G	G45	1		2005.06.01~	
082A 023	V2173610020	BOLT , HEX/S	M10X20	1		2005.06.01~	
082A 030	V7201124014	O-RING , P	P14	1		~2005.03.30	
082A 030	V7201124020	O-RING , P	P20	1		2005.06.01~	
082A 035	14801020070	CLAMP , 40		2		2005.06.01~	
082A 036	12305150010	BRACKET , FILTER		1		2005.06.01~	
082A 037	12305152000	FILTER ASSY , SUCTION		1		2005.06.01~	
082A 03701	12305152010M	HEAD , FILTER		1		2005.06.01~	
082A 03702	12305152100	CARTRIDGE , HYD		1		2005.06.01~	
082A 040	V2173610030	BOLT , HEX/S	M10X30	2		2005.06.01~	
082A 047	15004070010	HOSE ASSY , HYD 470		1		2005.06.01~	
082A 048	15006252220	UNION , PF1/2		3		2005.06.01~	
082A 049	12305180020	FILTER , 80 MESH		1		2005.06.01~	
082A 072	V7211031030	O-RING , G	G30	1		2005.06.01~	
082A 073	V2173608016	BOLT , HEX/S		1		2005.06.01~	
082A 074	15605150031	HOSE , 100		2		2005.06.01~	
082A 075	V7211031030	O-RING , G	G30	1		2005.06.01~	
082A 076	V2173608016	BOLT , HEX/S		1		2005.06.01~	
082A 080	12305152601	PIPE COMP , SUCTION/R/OUT		1		2005.06.01~	
082A 081	12305152501	PIPE COMP , SUCTION/R/IN		1		2005.06.01~	

NOTE

FIG 083	P.T.O VALVE & RELIEF VALVE	P1	Month/Year
4510C			06 / 2005

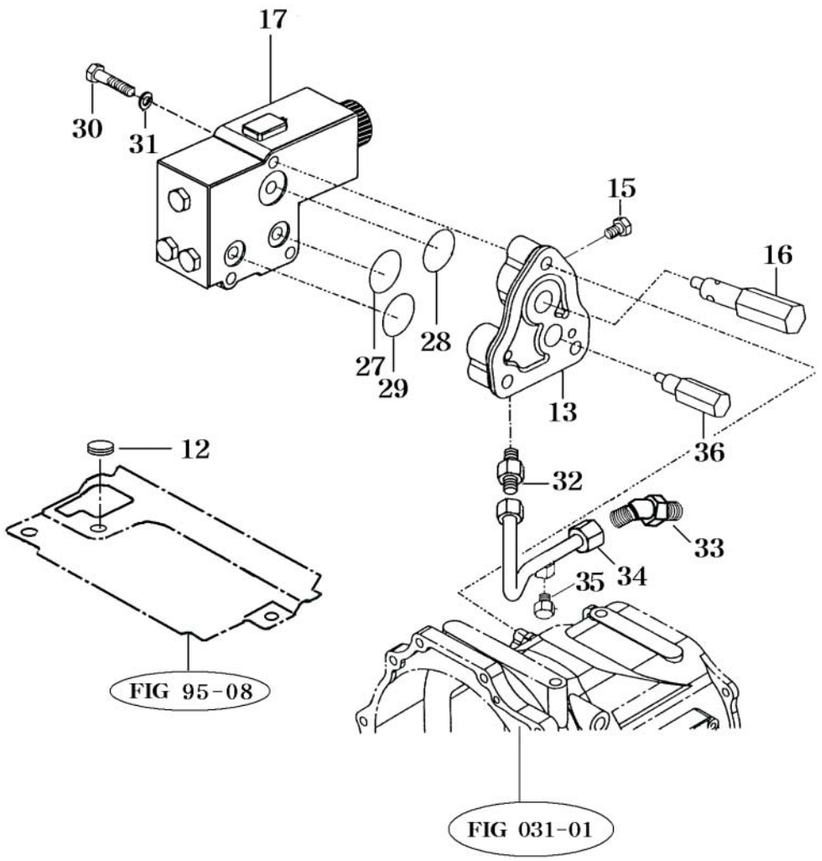

NOTE

FIG 083	P.T.O VALVE & RELIEF VALVE	P1	Month / Year
4510C			06 / 2005

KEY NO.		PART NO.	DESCRIPTION	SPEC.	QTY.	REPAIR	EFFECTIVE DATE	REMARKS
083	012	15606300310	CAP , 35		1			
083	013	15615182016M	FLANGE		1			
083	015	13267060022	PLUG , DRAIN		1			
083	016	15615182301	VALVE ASSY , FLASHER CONTROL		1	C		
083	017	16605182000	VALVE ASSY , PTO		1	C		
083	027	V7201119009	O-RING , P	P9	1	B		
083	028	V7201124020	O-RING , P	P20	1	B		
083	029	V7201124014	O-RING , P	P14	3	B		
083	030	V2013608085	BOLT , HEX	M8X85	3			
083	031	V4011600080	WASHER , SPRING	M8	3			
083	032	14444080062	CONNECTOR		1			
083	033	15615180013	CONNECTOR		1			
083	034	15645152904	PIPE COMP , DELIVERY		1			
083	035	13267060022	PLUG , DRAIN		1			
083	036	15640090001	VALVE ASSY , RELIEF		1	C		

NOTE

FIG 128	EXTERIOR HYD. VALVE	P1	Month/Year
4510C			06 / 2005

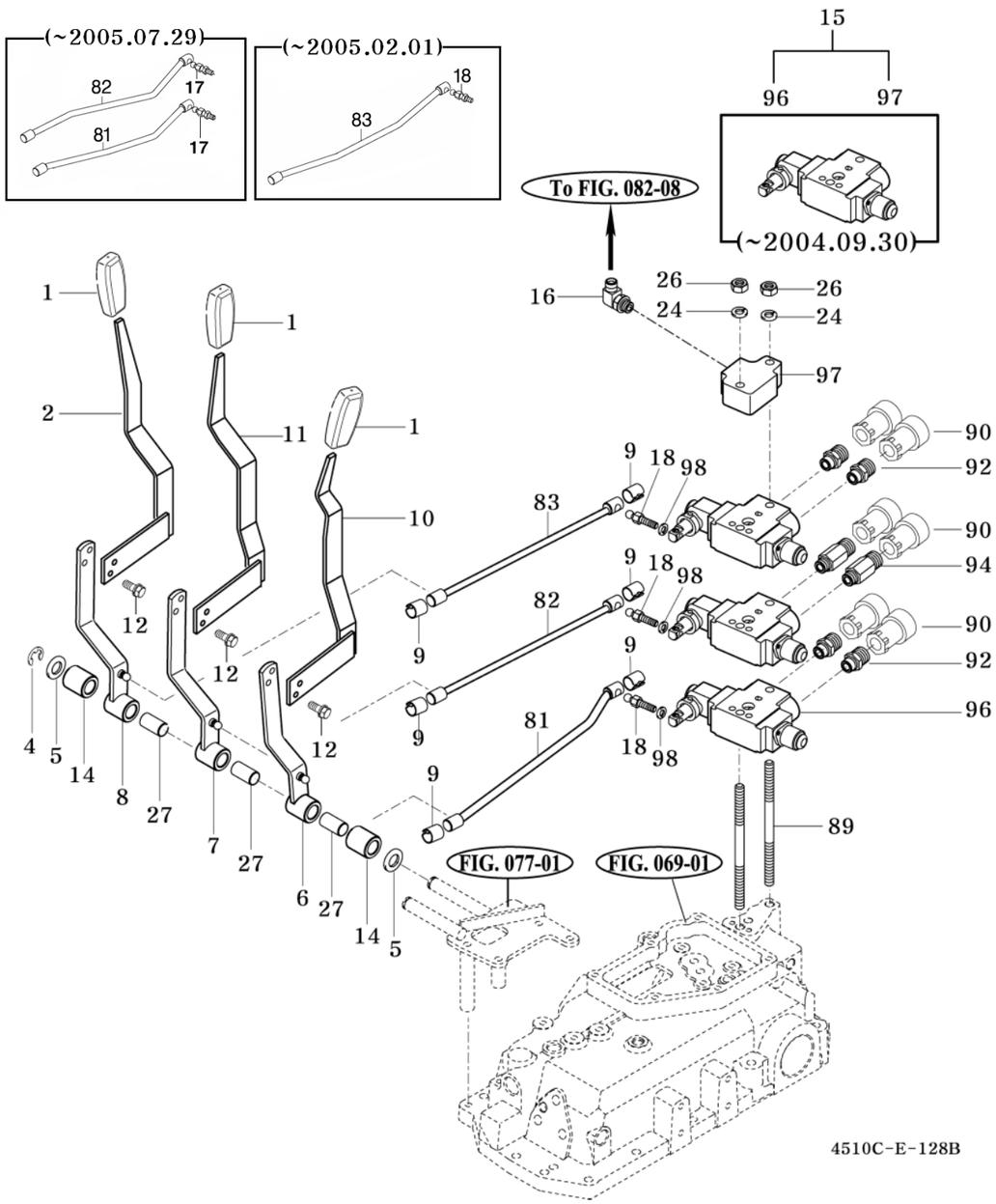

NOTE

FIG 128	EXTERIOR HYD. VALVE	P1	Month / Year
4510C			06 / 2005

KEY NO.		PART NO.	DESCRIPTION	SPEC.	QTY.	REPAIR	EFFECTIVE DATE	REMARKS
128	001	14322420040	CLIP		3			
128	002	16735122300DG	LEVER COMP , EXTERIO		1			
128	004	V7081400120	E-RING	12	1			
128	005	V4111600160	WASHER , PLAIN	M16	2			
128	006	16735082100	ARM COMP , EXTERIOR HYD 1		1		~2004.09.30	
128	006	16735082101	ARM COMP , EXTERIOR HYD 1		1		2004.10.01~	
128	007	16735082200	ARM COMP , EXTERIOR HYD 2		1		~2004.09.30	
128	007	16735082201	ARM COMP , EXTERIOR HYD 2		1		2004.10.01~	
128	008	16735082300	ARM COMP , EXTERIOR HYD 3		1		~2004.09.30	
128	008	16735082301	ARM COMP , EXTERIOR HYD 3		1		2004.10.01~	
128	009	17995080091	SPRING , LOCK		6			
128	010	16735122100DG	LEVER COMP , EXTERIO		1			
128	011	16735122200DG	LEVER COMP , EXTERIO		1			
128	012	V2113606012	BOLT , HEX /S	M6X12	3			
128	014	16735080010	COLLAR		2			
128	015	17995080151	VALVE ASSY , AUX EXTERIOR 6P		1		~2004.09.30	
128	015	17995080152	VALVE ASSY , AUX EXTERIOR 6P		1		2004.10.01~	
128	016	17407362300	ELBOW , PF3/8 PF1/2		1			
128	017	17995080171	JOINT , LINK		2		~2005.07.29	
128	018	16745080170	JOINT , LINK		1		~2005.02.01	
128	018	16745080171	JOINT , LINK		1		~2005.07.29	
128	018	16745080171	JOINT , LINK		3		2005.07.30~	
128	024	V4011600100	WASHER , SPRING	M10	2			
128	026	V3043600100	NUT , HEX/2	M10	2			
128	027	17995070270	BUSH , 16X18X33		3			
128	081	16735088100	ROD COMP , EXTERIOR HYD 1		1		~2004.09.30	
128	081	16735088101	ROD COMP , EXTERIOR HYD 1		1		~2005.07.29	
128	081	16735088102	ROD COMP , EXTERIOR HYD 1		1		2005.07.30~	
128	082	16735088201	ROD COMP , EXTERIOR HYD 2		1		~2004.09.30	
128	082	16735088202	ROD COMP , EXTERIOR HYD 2		1		~2005.07.29	
128	082	16735088203	ROD COMP , EXTERIOR HYD 2		1		2005.07.30~	
128	083	16735088801	ROD COMP , EXTERIOR HYD 3		1		~2004.09.30	
128	083	16735088802	ROD COMP , EXTERIOR HYD 3		1		~2005.02.01	
128	083	16735088803	ROD COMP , EXTERIOR		1		2005.02.02~	
128	089	17995080890	BOLT , STUD 170		2			
128	090	16995152360	COUPLING , 1/2		6			
128	092	17995080201	UNION , 1/2		4			
128	094	17995080931	UNION , 1/2 L60		2			
128	096	17995080960	VALVE , AUX EXTERIOR SPRING		3	C	~2004.09.30	
128	096	17995080961	VALVE , AUX EXTERIOR SPRING		3	C	2004.10.01~	
128	097	17995080970M	COVER , EXTERIOR HYD		1			
128	098	V4011600080	WASHER , SPRING		1		2005.02.02~2005.07.29	
128	098	V4011600080	WASHER , SPRING		3		2005.07.30~	

NOTE

FIG 084 4510C	LINK BRACKET	P1	Month/Year 06 / 2005

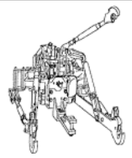

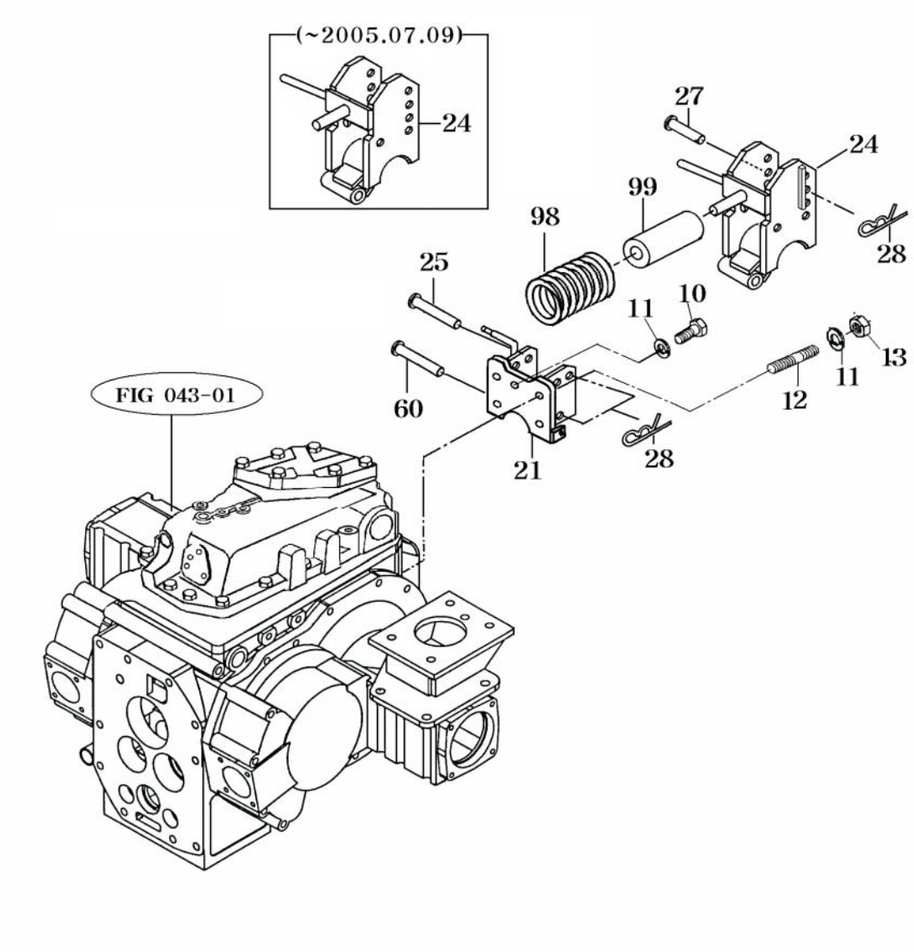

NOTE

FIG 084 4510C	LINK BRACKET	P1	Month / Year 06 / 2005

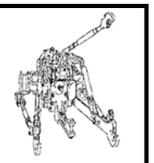

KEY NO.		PART NO.	DESCRIPTION	SPEC.	QTY.	REPAIR	EFFECTIVE DATE	REMARKS
084	010	V2013616035	BOLT , HEX	M16X35	3			
084	011	V4011600160	WASHER , SPRING	M16	5			
084	012	V2513416035	BOLT , STUD/2	M16X35	2			
084	013	V3043600160	NUT , HEX/2	M16	2			
084	021	12755222000DG	BRACKET COMP		1			
084	024	16735222101DG	LINK COMP		1		~2005.7.09	
084	024	16735222102DG	LINK COMP		1		2005.07.10~	
084	025	15645250010	PIN , 19X122		1			
084	027	15645220020	PIN , 19X95		1			
084	028	14445140051	PIN , 19		3			
084	060	15645250010	PIN , 19X122		1			
084	098	15685100020DG	SPRING , HC 067		1			
084	099	17995220990	RUBBER , GUIDE		1	B		

NOTE

FIG 085 4510C	HITCH & 3-POINT LINK	P1	Month/Year 06 / 2005	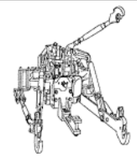

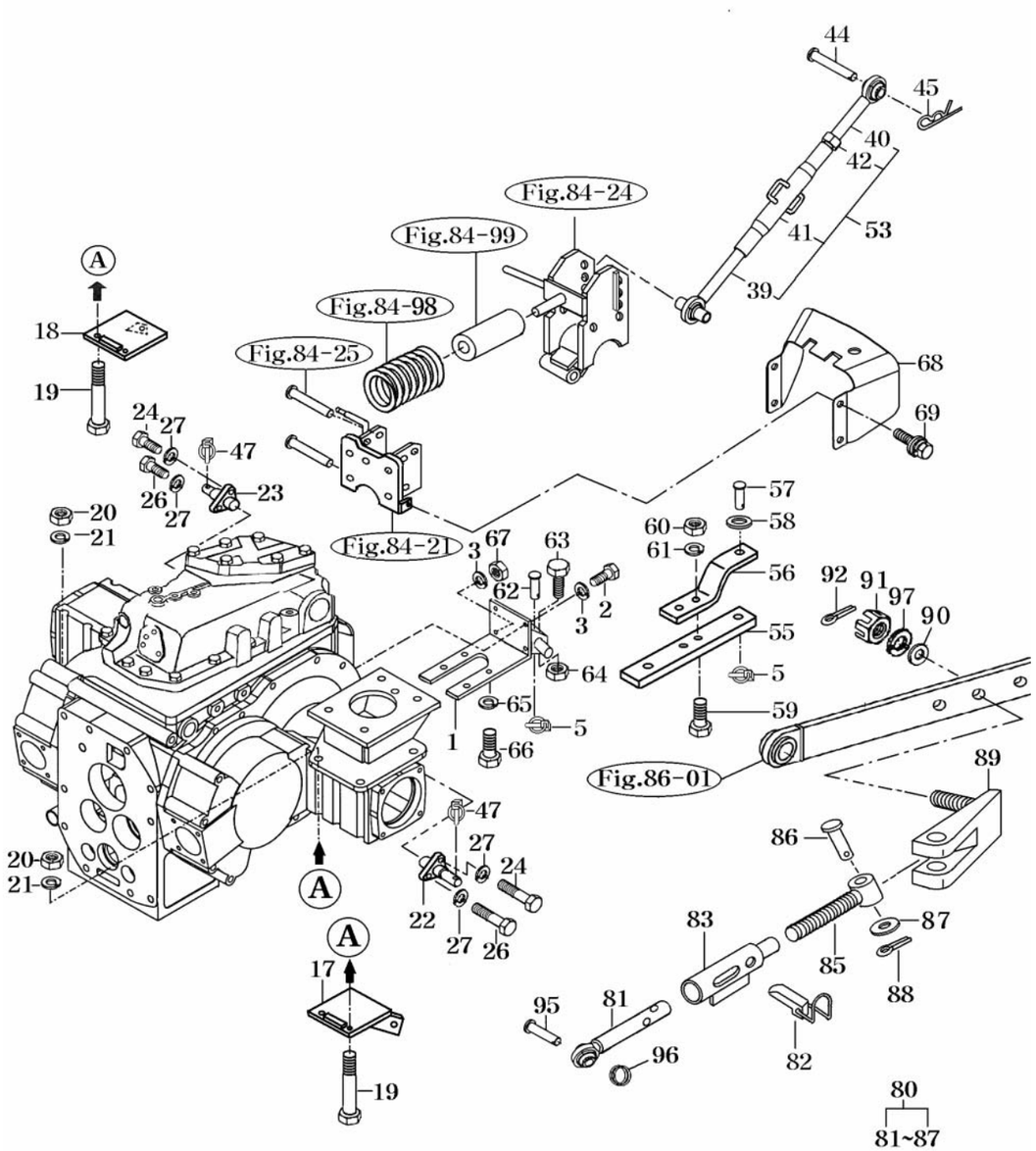

NOTE

FIG 085 4510C	HITCH & 3-POINT LINK	P1	Month / Year 06 / 2005	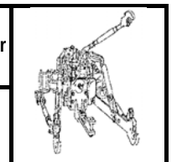

KEY NO.		PART NO.	DESCRIPTION	SPEC.	QTY.	REPAIR	EFFECTIVE DATE	REMARKS
085	001	12705202000DG	BRACKET COMP		1			
085	002	V2013616035	BOLT , HEX	M16X35	4			
085	003	V4011600160	WASHER , SPRING	M16	4			
085	005	14215020020	PIN , LINK		1			
085	017	16005252000DG	BRACKET COMP , LH		1			
085	018	16005252500DG	BRACKET COMP , RH		1			
085	019	V2013612170	BOLT , HEX	M12X170	8			
085	020	V3043600120	NUT , HEX/2	M12	8			
085	021	V4011600120	WASHER , SPRING	M12	8			
085	022	15685252204	PIN COMP , LH		1			
085	023	15685252801	PIN COMP , RH		1			
085	024	V2013614040	BOLT , HEX	M14X40	4			
085	026	V2013614040	BOLT , HEX	M14X40	2			
085	027	V4011600140	WASHER , SPRING	M14	6			
085	039	16505245510	LINK COMP , RH TOP L		1			
085	040	16505245520	LINK COMP , LH TOP L		1			
085	041	14885142300	TURNBUCKLE COMP		1			
085	042	16505245530	NUT , HEX		1			
085	044	15645220011	PIN , 19X86		1			
085	045	14445140051	PIN , 19		1			
085	047	14215020020	PIN , LINK		2			
085	053	16505245500DG	LINK ASSY , TOP LINK		1			
085	055	13602470010DG	LINK , DRAW BAR		1			
085	056	13602470020DG	LINK , HITCH		1			
085	057	S0973063031	PIN ASSY		1			
085	058	15252470010	RUBBER , CUSHION		1			
085	059	V2003616070	BOLT , HEX		2			
085	060	15189240010	NUT , U	M16	2			
085	061	V4011600160	WASHER , SPRING	M16	2			
085	062	15062470050	PIN , DRAW BAR	D=28	1			
085	063	V2013610030	BOLT , HEX	M10X30	1			
085	064	V3043600100	NUT , HEX/2	M10	1			
085	065	V4011600140	WASHER , SPRING	M14	4			
085	066	V2013614035	BOLT , HEX	M14X35	4			
085	067	V3043600160	NUT , HEX/2	M16	2			
085	068	13605200011DG	COVER , SHIELD		1			
085	069	V2183608016	BOLT , HEX/SP	M8X16	4			
085	080	17705254000	CHAIN ASSY , CHECK		2		~2005.01.12	
085	080	16745254000	CHAIN ASSY , CHECK LH		1		2005.01.13~	
085	080	16745255000	CHAIN ASSY , CHECK RH		1		2005.01.13~	
085	081	17705254100	ROD , FRONT		2			
085	082	17705254200	PIN		2			
085	083	17705254300	SLEEVE		2			
085	085	17705254400	ROD , REAR		2			
085	086	17705254600	PIN		2			
085	087	V4111600180	WASHER , PLAIN	M18	2			
085	088	17705254700	PIN		2			
085	089	17705254500	PIN		2			

NOTE

FIG 085 4510C	HITCH & 3-POINT LINK	P2	Month/Year 06 / 2005	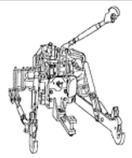

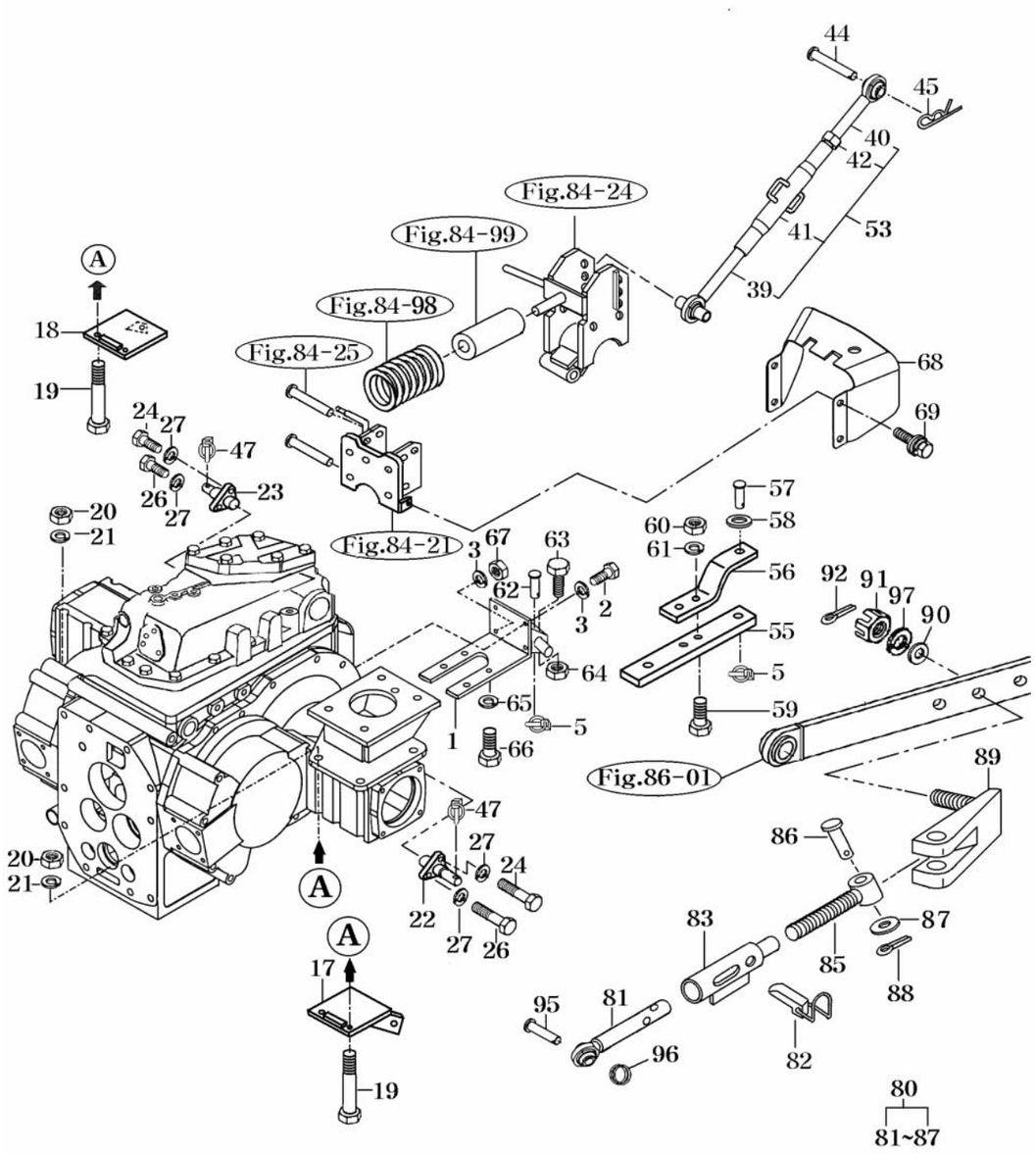

NOTE

FIG 085 4510C	HITCH & 3-POINT LINK	P2	Month / Year 06 / 2005	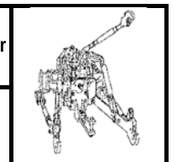

KEY NO.		PART NO.	DESCRIPTION	SPEC.	QTY.	REPAIR	EFFECTIVE DATE	REMARKS
085	090	V4011600180	WASHER , SPRING	M18	2			
085	091	V3212600180	NUT , HEX SLOT & CAS	M18	2		~2005.01.12	
085	091	V3202600180	NUT , HEX SLOT & CAS	M18XP1.5	2		2005.01.13~	
085	092	V5001940035	PIN , SPLIT	4X35	2			
085	095	15645220020	PIN , 19X95		2			
085	096	16735240060	SPRING		2		~2005.01.12	
085	096	12505240060	SPRING (45)		2		2005.01.13~	
085	097	V4011600180	WASHER , SPRING	M18	2		2005.01.13~	

NOTE

FIG 086	LOWER LINK & LIFT ROD	P1	Month/Year
4510C			06 / 2005

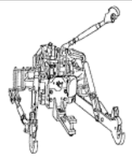

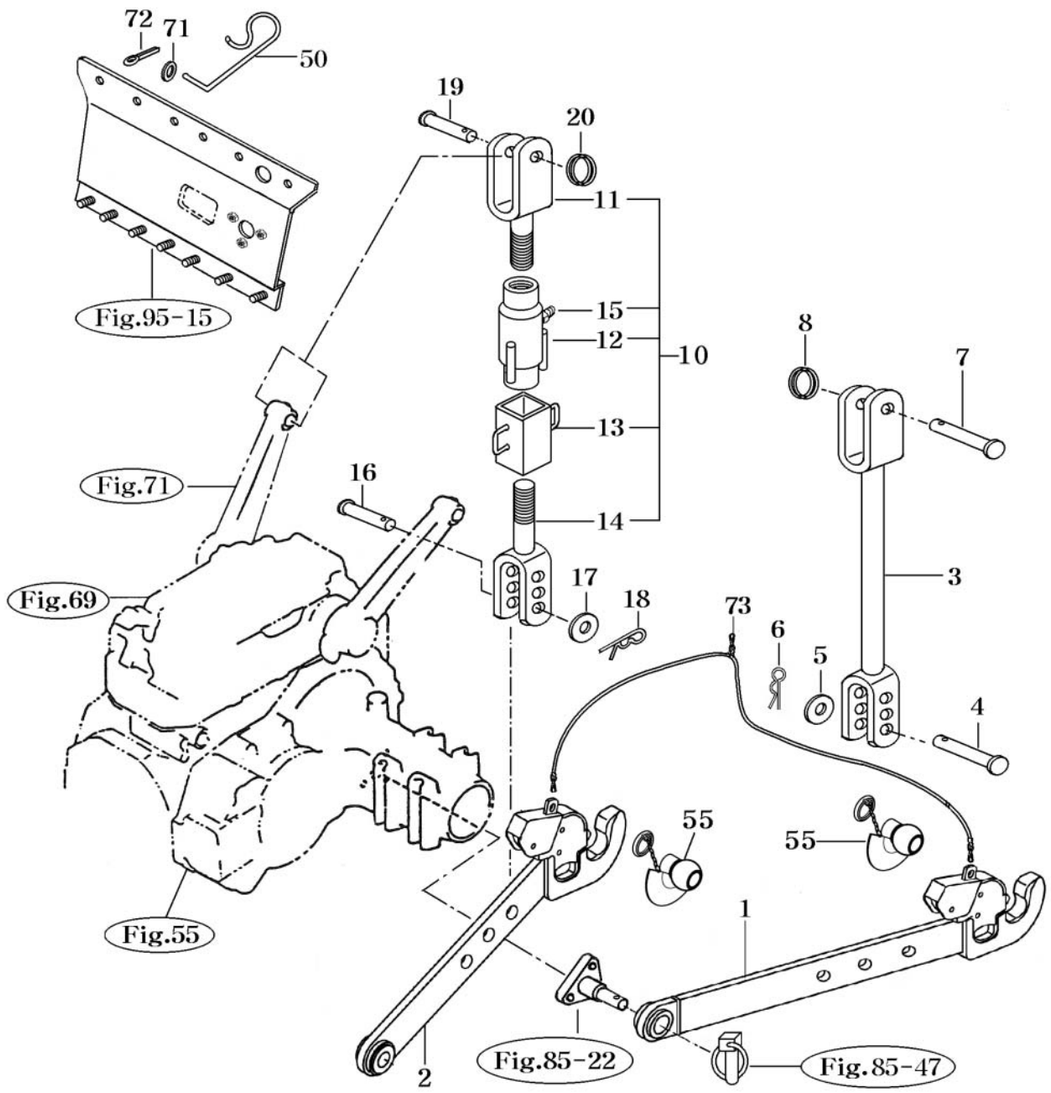

NOTE

FIG 086	LOWER LINK & LIFT ROD	P1	Month / Year
4510C			06 / 2005

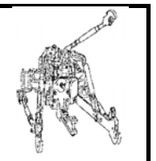

KEY NO.		PART NO.	DESCRIPTION	SPEC.	QTY.	REPAIR	EFFECTIVE DATE	REMARKS
086	001	17705252001DG	LINK ASSY . LH LOWER		1		~2005.01.12	
086	001	16745252000DG	LINK ASSY . LH LOWER		1		2005.01.13~	
086	002	17705256001DG	LINK ASSY . RH LOWER		1		~2005.01.12	
086	002	16745256000DG	LINK ASSY . RH LOWER		1		2005.01.13~	
086	003	16735243000DG	ROD ASSY , LIFT		1		~2005.01.12	
086	003	12505243000DG	ROD ASSY , LIFT		1		2005.01.13~	
086	004	16605260010	PIN (16X62)		1		~2005.01.12	
086	004	15605260014			1		2005.01.13~	
086	005	V4111600160	WASHER , PLAIN	M16	1			
086	006	V5601600016	PIN , SNAP	16	1			
086	007	16735243500	PIN		1		~2005.01.12	
086	007	12505243500	PIN (19X70)		1		2005.01.13~	
086	008	16735240060	SPRING		1		~2005.01.12	
086	008	12505240060	SPRING (45)		1		2005.01.13~	
086	010	16735245300DG	ROD ASSY , LIFT		1		~2005.01.12	
086	010	12505245300DG	ROD ASSY , LIFT		1		2005.01.13~	
086	011	16735245311	ROD, COMP , LH		1		~2005.01.12	
086	011	12505245310	ROD, COMP , LH		1		2005.01.13~	
086	012	16735245321	SLEEVE COMP		1		~2005.01.12	
086	012	12505245320	SLEEVE COMP		1		2005.01.13~	
086	013	16735245351	HANDLE COMP		1		~2005.01.12	
086	013	12505245330	HANDLE COMP		1		2005.01.13~	
086	014	16735245341	ROD, COMP , RH		1		~2005.01.12	
086	014	12505245340	ROD, COMP , RH		1		2005.01.13~	
086	015	V7601500000	NIPPLE , GREASE/A-M6F	A-M6F.P=1.0	1		~2005.01.12	
086	015	12505245350	NIPPLE , GREASE/A-M6F		1		2005.01.13~	
086	016	16605260010	PIN , 16X62		1		~2005.01.12	
086	016	15605260014	PIN , 16X51		1		2005.01.13~	
086	017	V4111600160	WASHER , PLAIN	M16	1			
086	018	V5601600016	PIN , SNAP	16	1			
086	019	16735243500	PIN		1		~2005.01.12	
086	019	12505243500	PIN (19X70)		1		2005.01.13~	
086	020	16735240060	SPRING		1		~2005.01.12	
086	020	12505240060	SPRING (45)		1		2005.01.13~	
086	050	17994500591	STOPPER ASSY , TOP LINK		1			
086	055	16505240300	BUSH , GUIDE		2		~2005.01.12	
086	055	16745240300	BUSH , GUIDE		2		2005.01.13~	
086	071	V4111600060	WASHER , PLAIN	M6	1			
086	072	V5001925015	PIN , SPLIT	2.5X15	1			
086	073	16995252601	WIRE ASSY		1			

NOTE

FIG 090	BONNET (1)	P1	Month/Year
4510C			06 / 2005

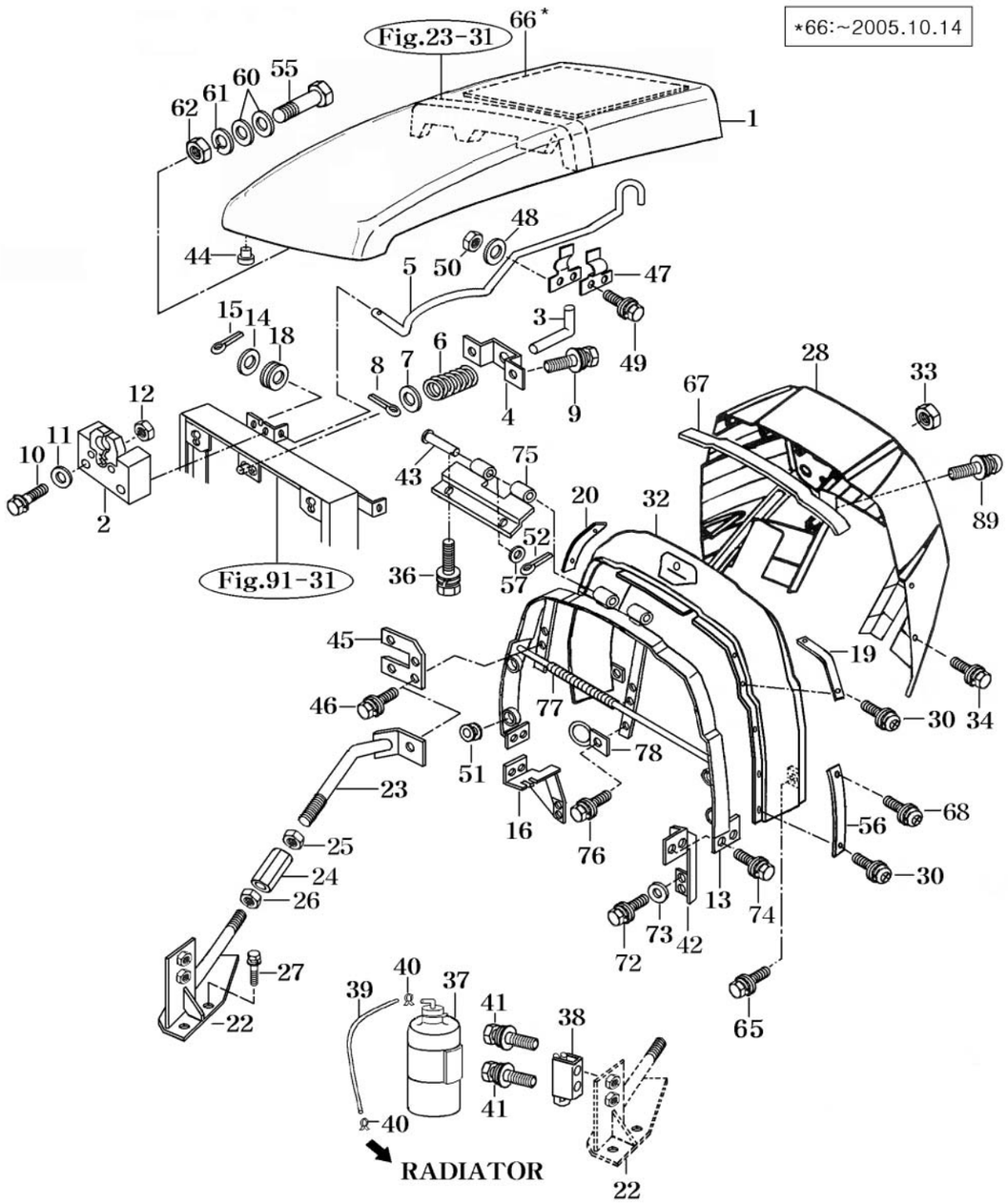

NOTE

FIG 090	BONNET (1)	P1	Month / Year
4510C			06 / 2005

KEY NO.	PART NO.	DESCRIPTION	SPEC.	QTY.	REPAIR	EFFECTIVE DATE	REMARKS
090 001	16006201001BR	HOOD COMP		1			
090 002	16996020600	LOCK COMP , HOOD		1			
090 003	16996020650DG	ROD , HOOD OPENING		1			
090 004	16996020662DG	PLATE		1			
090 005	16006020680	STAY , HOOD		1			
090 006	16996010280	SPRING		1			
090 007	V4111600160	WASHER , PLAIN	M16	1			
090 008	V5001940025	PIN , SPLIT	4X25	1			
090 009	V2173608016	BOLT , HEX/S	M8X16	2			
090 010	V2053606035	BOLT , HEX C/R	M6X35	2			
090 011	V4111600060	WASHER , PLAIN	M6	2			
090 012	V3002600060	NUT , HEX/1	M6	2			
090 013	16006052104DG	FRAME COMP , HOOD		1			
090 014	V4111600100	WASHER , PLAIN	M10	1			
090 015	V5001925025	PIN , SPLIT	2.5X25	1			
090 016	16006022000DG	STAY COMP , RH PLATE		1			
090 018	14046210300	GROMMET		1			
090 019	16996010010DG	PLATE , A		1			
090 020	16996010020DG	PLATE , B		1			
090 022	14616022000DG	STAY COMP , LOW BAR		1			
090 023	16006022100	STAY COMP . UPR BAR 10		1			
090 024	36401090020	ADJUSTER		1			
090 025	V3042600100	NUT , HEX/2	M10	1			
090 026	36252120070	NUT , L	M10	1			
090 027	V2173608020	BOLT , HEX/S	M8X20	2			
090 028	16996130024	COVER , DASH		1		~2004.03.12	
090 028	16996130025	COVER , DASH		1		2004.03.13~	
090 030	V1222606020	SCREW , C/R PAN/SP	M6X20	7			
090 032	16006301043	INSULATOR		1			
090 033	15606030030	NUT , M6		4			
090 034	V2193606016	BOLT , HEX/SPL	M6X16	4			
090 036	V2183608020	BOLT , HEX/SP	M8X20	2			
090 037	16003302100	TANK ASSY , RESERVE		1			
090 038	36753302201DG	HOLDER COMP , TANK/R		1			
090 039	16003300012	HOSE , 560/7.5X13.5		1			
090 040	36423600080	CLIP , HOSE D=12.5		2			
090 041	V2183608025	BOLT , HEX/SP	M8X25	2			
090 042	16006023800DG	STAY COMP , RH		1			
090 043	16996024552	PIN		2			
090 044	16996013431	RUBBER , CUSHION		2			
090 045	16796024601DG	BRACKET COMP , FUSE		1			
090 046	V2183608020	BOLT , HEX/SP	M8X20	2			
090 047	15606040227	SPRING		2			
090 048	V4111600080	WASHER , PLAIN	M8	2			
090 049	V2013608016	BOLT , HEX	M8X16	2			
090 050	V3802600080	NUT , HEX FLANGE	M8	2			
090 051	16996015511	RUBBER , GUARD		4			
090 052	V5001925020	PIN , SPLIT	2.5X20	2			

NOTE

FIG 090	BONNET (1)	P1	Month/Year
4510C			06 / 2005

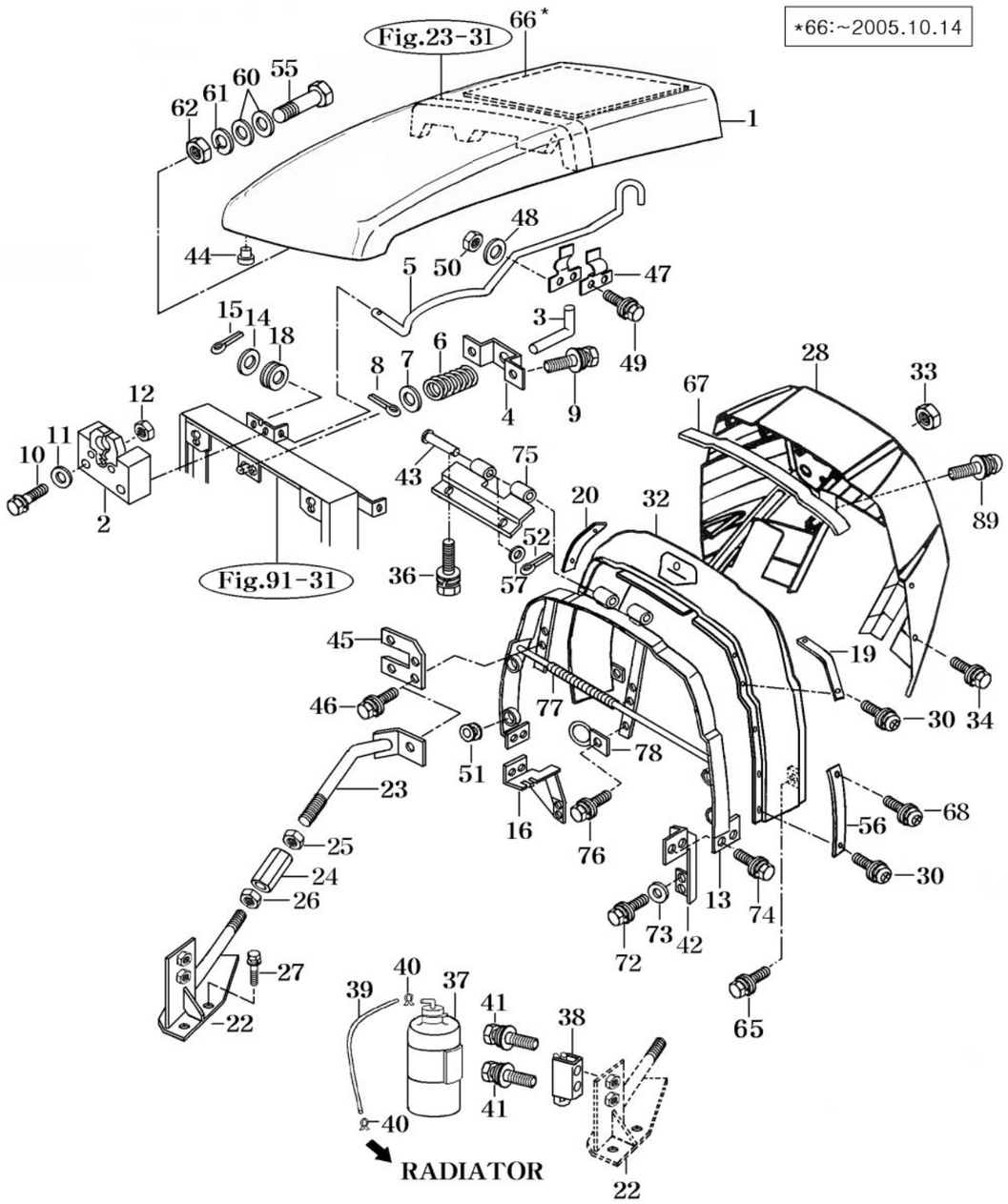

NOTE

FIG 090	BONNET (1)	P2	Month / Year
4510C			06 / 2005

KEY NO.		PART NO.	DESCRIPTION	SPEC.	QTY.	REPAIR	EFFECTIVE DATE	REMARKS
090	055	16996204570	BOLT , FIXED HOOD		1			
090	056	16996015530DG	PLATE		2			
090	057	16991600080	WASHER , HOOD FRAME		2			
090	060	V4111600120	WASHER , PLAIN	M12	2			
090	061	V4011600120	WASHER , SPRING	M12	1			
090	062	V3042600120	NUT , HEX/2	M12	1			
090	065	V2193606020	BOLT , HEX/SPL	M6X20	2			
090	066	16006024710	INSULATOR , RR HOOD		1		~2005.10.14	
090	067	16996024721	INSULATOR , DASH COVER		1			
090	068	V2053606025	BOLT , HEX C/R	M6X25	1		~2005.02.15	
090	068	V2193606025	BOLT , HEX/SPL	M6X25	1		2005.02.16~	
090	072	V2013612025	BOLT , HEX	M12X25	4			
090	073	V4011600120	WASHER , SPRING	M12	4			
090	074	V2173608025	BOLT , HEX/S	M8X25	4			
090	075	16996054501DG	BRACKET COMP , HOOD		1			
090	076	V2183608020	BOLT , HEX/SP	M8X20	1			
090	077	16501020070	TUBE , CORRUGATE 210		1			
090	078	16491163701DG	BRACKET , STEERING H		1			
090	089	V1222608020	SCREW , C/R PAN/SP	M8X20	4			

NOTE

FIG 091 4510C	BONNET (2)	P1	Month/Year 06 / 2005

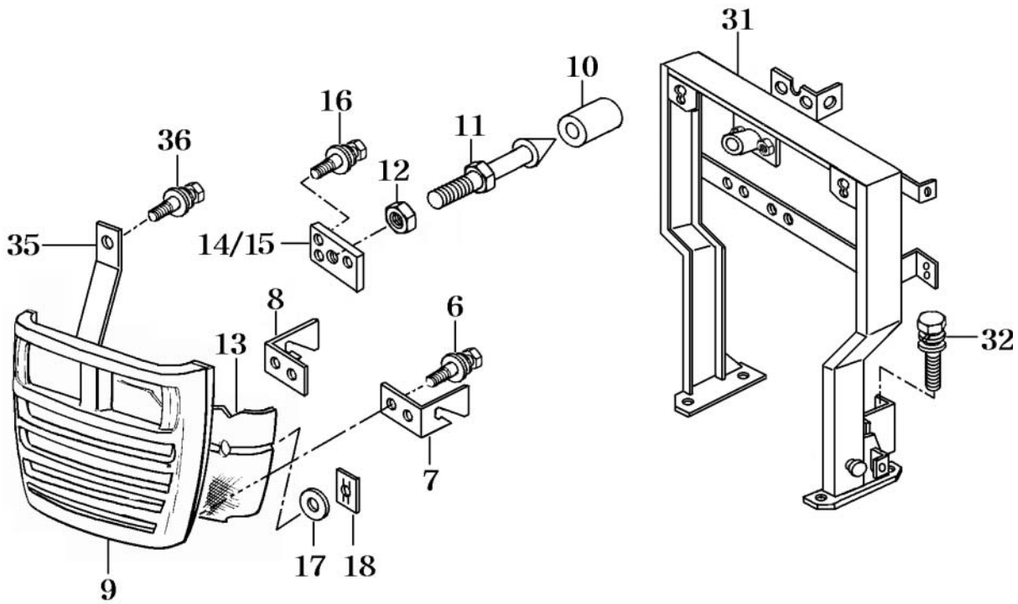

NOTE

FIG 091 4510C	BONNET (2)	P1	Month / Year 06 / 2005

KEY NO.		PART NO.	DESCRIPTION	SPEC.	QTY.	REPAIR	EFFECTIVE DATE	REMARKS
091	006	V2183608016	BOLT , HEX/SP	M8X16	4			
091	007	16996013411	HOOK , LH		1			
091	008	16996013421	HOOK , RH		1			
091	009	17406204101BR	GRILLE		1			
091	010	16996013450	RUBBER , FIXED COVER		2			
091	011	16996013441	PIN , FR COVER		2			
091	012	V3052600080	NUT , HEX/3	M8	2			
091	013	16996204200DG	NET		1			
091	014	16996204301	PLATE , GRILLE		1			
091	015	16996204401	PLATE , GRILLE		1			
091	016	V2323606016	BOLT , C/R HEX/SP	M6X16	6			
091	017	14446010150	WASHER , NET		5			
091	018	V3501100060	NUT , PUSH-ON SPRING	M6	5			
091	031	16006011002DG	FRAME COMP , FR HOOD		1			
091	032	V2183608020	BOLT , HEX/SP	M8X20	4			
091	035	16996204171	STAY . GRILLE		2			
091	036	V2193606016	BOLT , HEX/SPL	M6X16	4			

NOTE

FIG 092	SIDE COVER	P1	Month/Year
4510C			06 / 2005

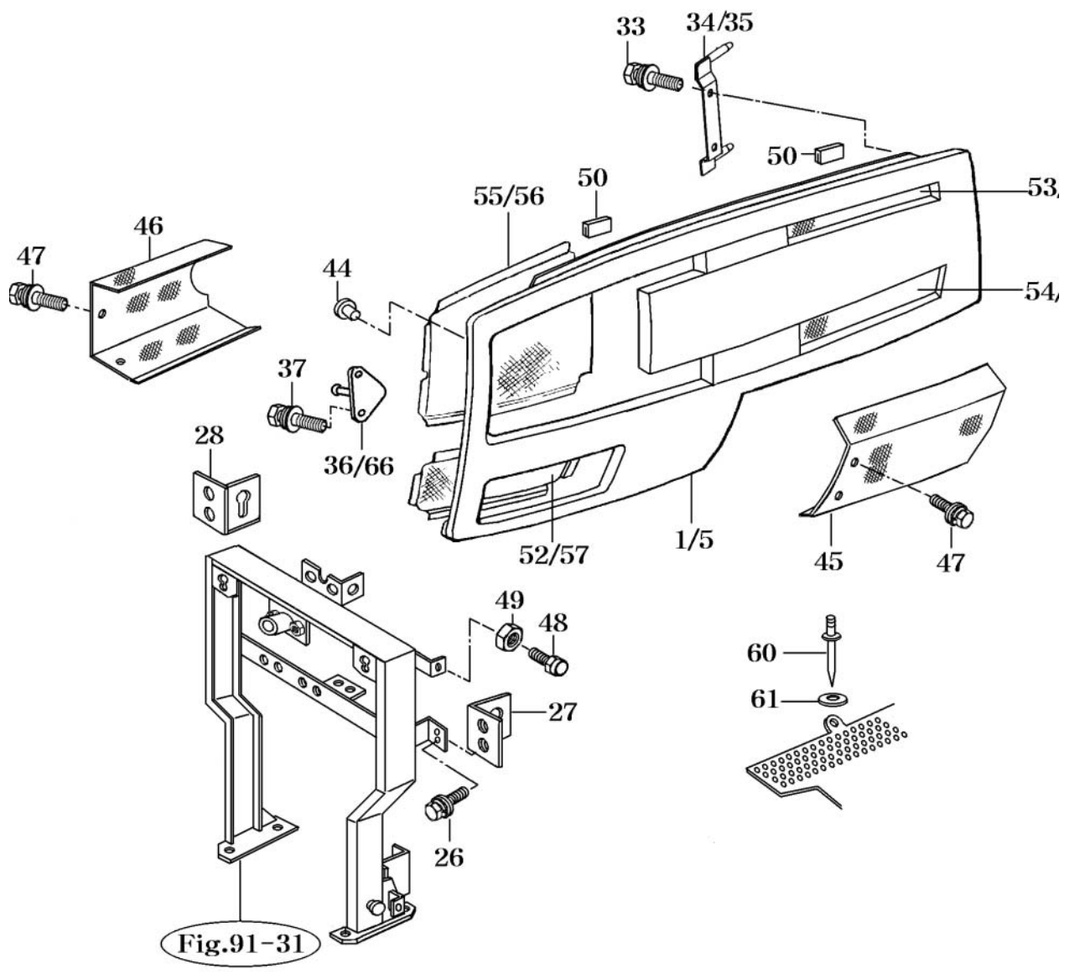

NOTE

FIG 092	SIDE COVER	P1	Month / Year
4510C			06 / 2005

KEY NO.		PART NO.	DESCRIPTION	SPEC.	QTY.	REPAIR	EFFECTIVE DATE	REMARKS
092	001	16006202102BR	COVER COMP , LH SIDE		1			
092	005	16006203102BR	COVER COMP , RH SIDE		1			
092	026	V2193606016	BOLT , HEX/SPL	M6X16	6			
092	027	16996013501DG	PLATE COMP , LH		1			
092	028	16996013601DG	PLATE COMP , RH		1			
092	033	V2183608016	BOLT , HEX/SP	M8X16	4			
092	034	16996043600	PIN COMP , RR LH		1			
092	035	16996043700	PIN COMP , RR RH		1			
092	036	16796043800DG	PIN COMP , FR LH		1			
092	037	V2183608016	BOLT , HEX/SP	M8X16	4			
092	044	16996013431	RUBBER , CUSHION		4			
092	045	16006103300DG	COVER COMP , LH SAFE		1			
092	046	16006103410DG	COVER , RH SAFETY		1			
092	047	V2183608020	BOLT , HEX/SP	M8X20	4			
092	048	V2013608035	BOLT , HEX	M8X35	4			
092	049	V3042600080	NUT , HEX/2	M8	4			
092	050	36502010060	PROTECTOR , EDGE		4			
092	052	16006202031DG	PLATE , B LH		1			
092	053	16006202042DG	PLATE , C LH		1			
092	054	16006202051DG	PLATE , D LH		1			
092	055	16006202022DG	PLATE , A LH		1			
092	056	16006203022DG	PLATE , A RH		1			
092	057	16006203031DG	PLATE , B RH		1			
092	058	16006203042DG	PLATE , C RH		1			
092	059	16006203051DG	PLATE , D RH		1			
092	060	V5502040093	RIVET , BLIND	4X9.3	44			
092	061	V4111600040	WASHER , PLAIN	M4	44			
092	066	16796043900DG	PIN COMP , FR RH		1			

NOTE

FIG 093	LEVER COVER	P1	Month/Year
4510C			06 / 2005

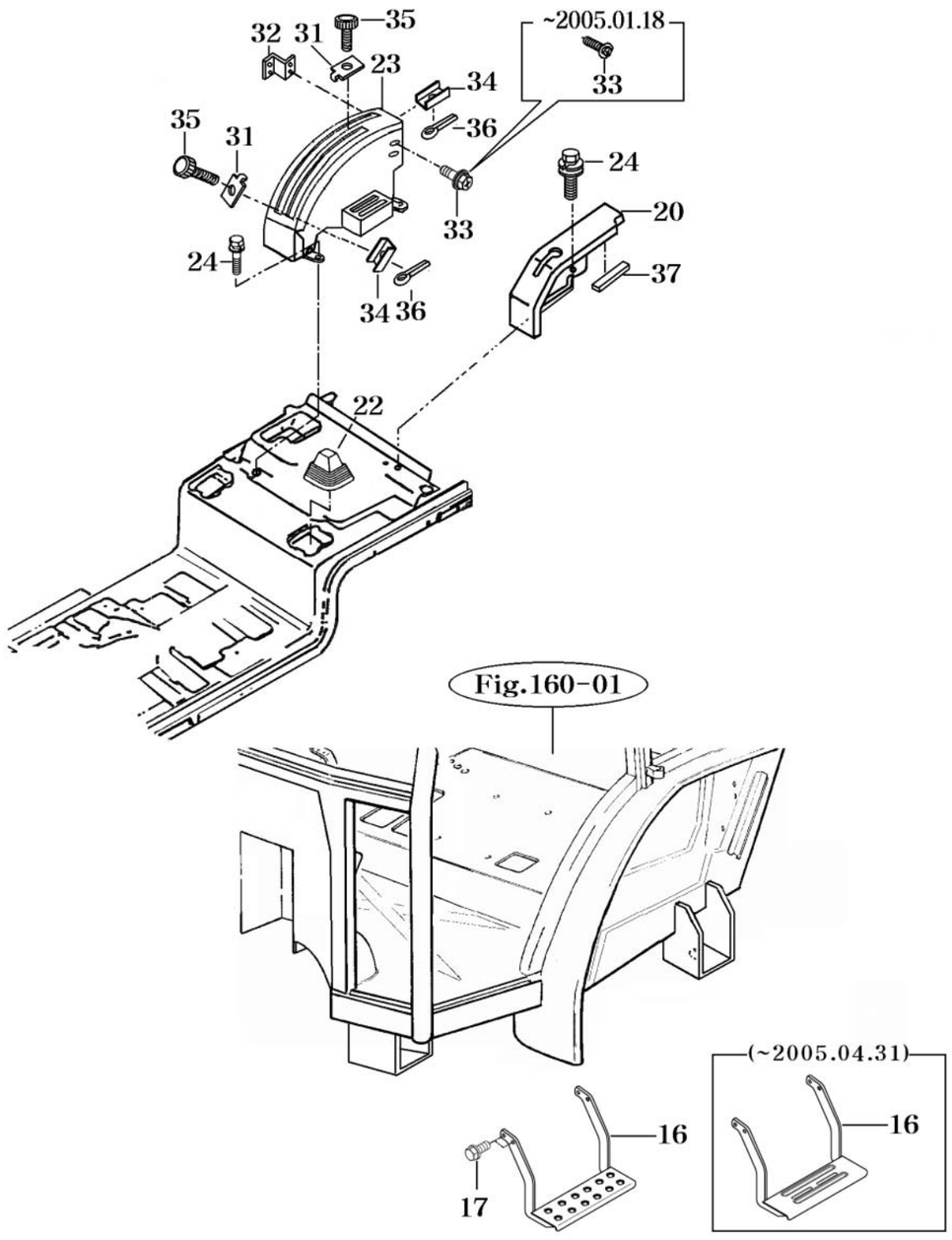

NOTE

FIG 093	LEVER COVER	P1	Month / Year
4510C			06 / 2005

KEY NO.		PART NO.	DESCRIPTION	SPEC.	QTY.	REPAIR	EFFECTIVE DATE	REMARKS
093	016	16606062602DG	STEP COMP		2		~2005.04.31	
093	016	16606062603DG	STEP COMP		2		2005.05.01~	
093	017	V2173608025	BOLT , HEX/S	M8X25	8			
093	020	16996082301	GUIDE COMP , LH		1			
093	022	15606082203	BOOT		2	C		
093	023	16996082404DG	GUIDE COMP . RH		1		~2004.09.30	
093	023	16996082404DG	GUIDE COMP . RH		1		2004.10.01~	
093	024	V2183608016	BOLT , HEX/SP	M8X16	4			
093	031	15606092013	PLATE		2			
093	032	15616092003DG	STAY COMP , PLATE		1			
093	033	V1222606016	SCREW , C/R PAN/SP	M6X16	2		~2005.01.18	
093	033	V2193606016	BOLT , HEX/SPL	M6X16	2		2005.01.19~	
093	034	15606092103	PLATE COMP		2			
093	035	15186070020	BOLT , KNOB M8X31		2			
093	036	V5001920020	PIN , SPLIT	2X20	2			
093	037	15196040050	RUBBER , HOOK		2			

NOTE

FIG 094	FRONT & REAR MOUNTING	P1	Month/Year
4510C			06 / 2005

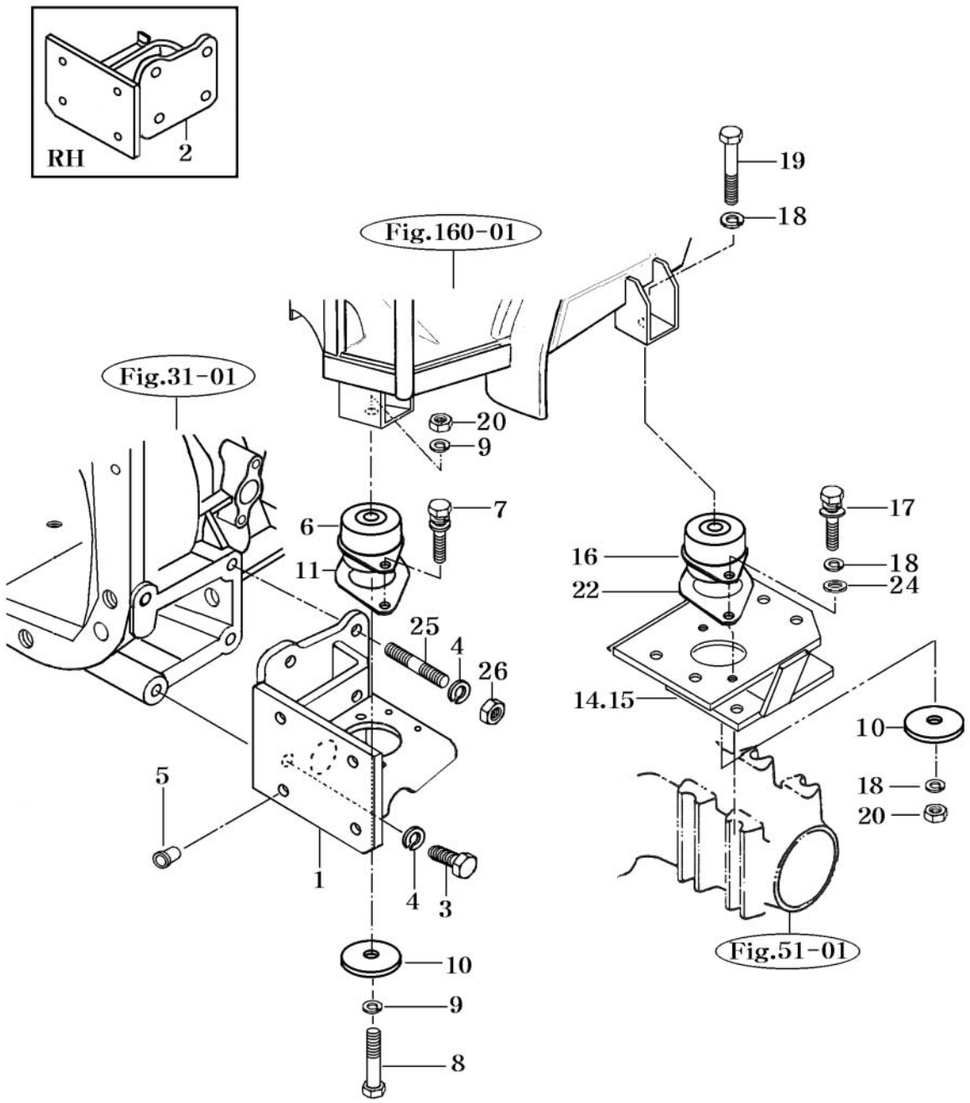

NOTE

FIG 094	FRONT & REAR MOUNTING	P1	Month / Year
4510C			06 / 2005

KEY NO.		PART NO.	DESCRIPTION	SPEC.	QTY.	REPAIR	EFFECTIVE DATE	REMARKS
094	001	16496252202DG	BRACKET COMP , FR/LH		1			
094	002	16496252003DG	BRACKET COMP , FR/RH		1			
094	003	V2013616035	BOLT , HEX	M16X35	4			
094	004	V4011600160	WASHER , SPRING	M16	8			
094	005	14326210110	CAP , M16		8			
094	006	15966250010	INSULATOR		2			
094	007	V2183612025	BOLT , HEX/SP	M12X25	4			
094	008	V2014612075	BOLT , HEX	M12X75	2			
094	009	V4011600120	WASHER , SPRING	M12	6			
094	010	15966250030DG	PLATE , 85X6T		4			
094	011	15966250020DG	PLATE		2			
094	014	16006265400DG	BRACKET COMP , RR LH		1			
094	015	16006265500DG	BRACKET COMP , RR RH		1			
094	016	15966250010	INSULATOR		2			
094	017	V2013612025	BOLT , HEX	M12X25	4			
094	018	V4011600120	WASHER , SPRING	M12	6			
094	019	V2014612075	BOLT , HEX	M12X75	2			
094	020	V3043600120	NUT , HEX/2	M12	4			
094	022	15966250020DG	PLATE		2			
094	024	V4111600120	WASHER , PLAIN	M12	4			
094	025	V2513416035	BOLT , STUD/2	M16X35	4			
094	026	V3043600160	NUT , HEX/2	M16	4			

NOTE

FIG 095	FLOOR & SEAT	P1	Month/Year
4510C			06 / 2005

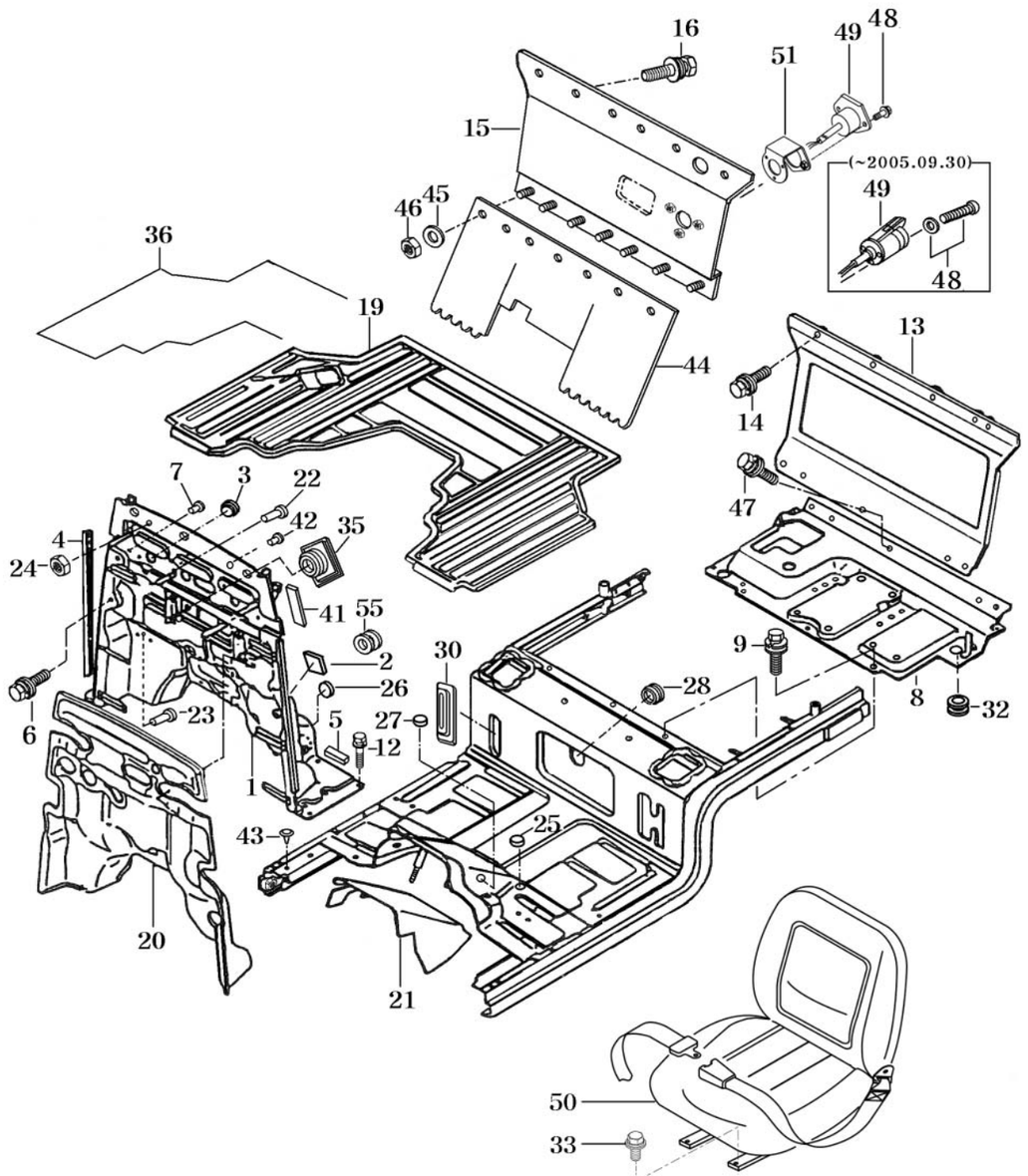

NOTE

FIG 095	FLOOR & SEAT	P1	Month / Year
4510C			06 / 2005

KEY NO.		PART NO.	DESCRIPTION	SPEC.	QTY.	REPAIR	EFFECTIVE DATE	REMARKS
095	001	16006303204DG	PANEL SET , DASH		1			
095	002	16996300200	INSULATOR		1			
095	003	16996300210	INSULATOR		1			
095	004	15606300030	INSULATOR		2			
095	005	15646300120	INSULATOR		2			
095	006	V2183608020	BOLT , HEX/SP	M8X20	4			
095	007	14346110021	CAP		4			
095	008	17995303802DG	PANEL COMP , LOW SEA		1		~2004.10.25	
095	008	17995303803DG	PANEL COMP , LOW SEA		1		2004.10.26~	
095	009	V2183608020	BOLT , HEX/SP	M8X20	5			
095	012	V2183608020	BOLT , HEX/SP	M8X20	10			
095	013	16997010640	COVER , FR TANK		1			
095	014	V2123806016	BOLT , HEX /SP	M6X16	9			
095	015	17997027101DG	COVER COMP , RR TANK		1			
095	016	V2123806016	BOLT , HEX /SP	M6X16	6			
095	019	16997010654	MAT		1			
095	020	16756300072	INSULATOR , DASH PANEL		1			
095	021	15646300083	INSULATOR		1			
095	022	14216020051	RUBBER , CUSHION B		2			
095	023	14326160020	RUBBER , CUSHION		3			
095	024	V3042600080	NUT , HEX/2	M8	2			
095	025	14326510210	CAP , RUBBER 20		2			
095	026	15187221070	CAP , RUBBER 40		1			
095	027	16606510210	CAP , RUBBER 30		2			
095	028	16736300010	BOOT , SLOW RETURN		1			
095	030	16606300030	BOOT , DIFF LOCK		1			
095	032	16606300050	CAP , BREATHER 30		1			
095	033	V2183608020	BOLT , HEX/SP	M8X20	4			Option
095	035	16756300010	BOOT , STEERING HOSE		1			
095	036	16997010910	PAPER , PROTECTOR		1			
095	041	16421040010	INSULATOR		2			
095	042	14346110021	CAP		8			
095	043	15276040020	CLIP , TRIM		4			
095	044	17997021770	PLATE , MUD GUARD		1			
095	045	35605033020	WASHER , WIRE WITHDRAWAL		5			
095	046	V3042600080	NUT , HEX/2	M8	5			
095	047	V2123806016	BOLT , HEX /SP	M6X16	2			
095	048	V1112605030	SCREW , C/R PAN	M5X30	3		~2005.09.30	
095	048	V1212605016	SCREW , C/R PAN		3		2005.10.01~	
095	049	16997028201	SOCKET ASSY , TRAILER		1		~2005.09.30	
095	049	13307028200	SOCKET ASSY , TRAILER		1		2005.10.01~	
095	050	15606112600	SEAT ASSY		1			Option
095	051	14517015900DG	BRACKET COMP, TRAILER SOCK		1		2005.10.01~	
095	055	16606510210	CAP , RUBBER 30		3			

NOTE

FIG 099	BATTERY & MOUNTING	P1	Month/Year
4510C			06 / 2005

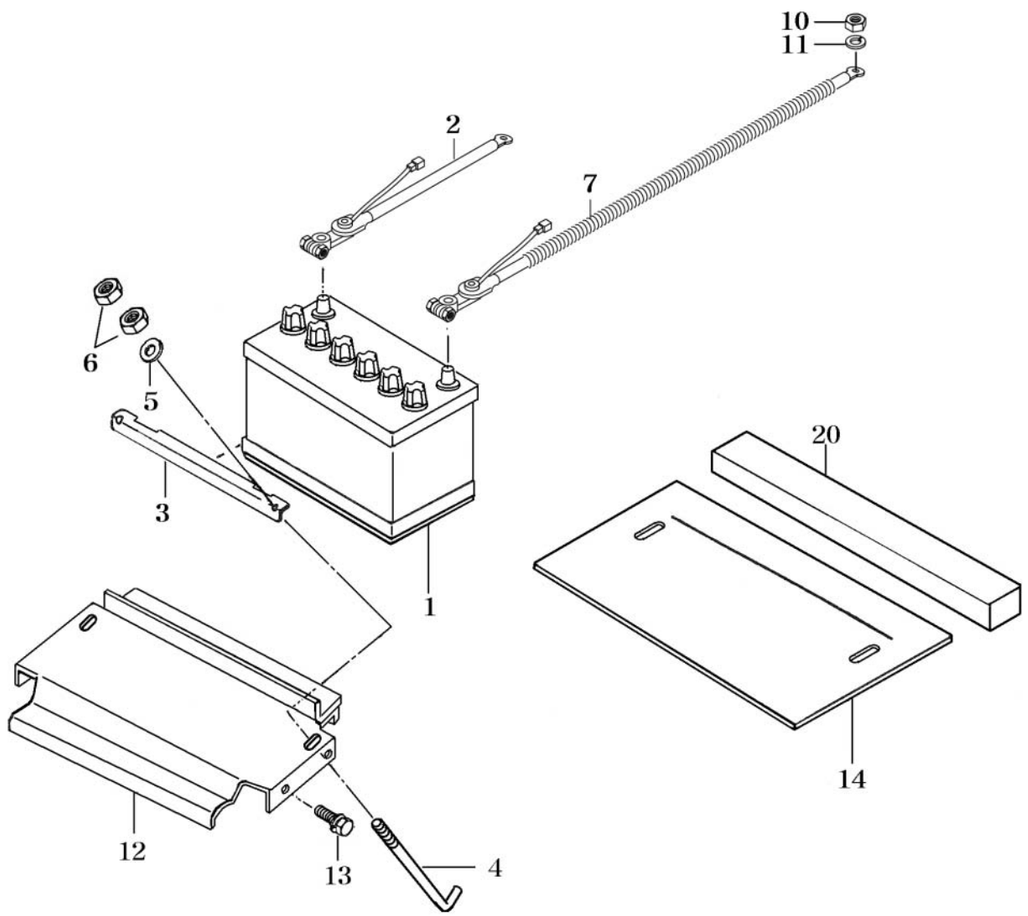

NOTE

FIG 099	BATTERY & MOUNTING	P1	Month / Year
4510C			06 / 2005

KEY NO.		PART NO.	DESCRIPTION	SPEC.	QTY.	REPAIR	EFFECTIVE DATE	REMARKS
099	001	15186214401	BATTERY ASSY , 130E41R-MF		1	B		
099	002	16996503000	HARNESS		1		~2004.02.19	
099	002	16996503001	HARNESS		1		2004.02.20~	
099	003	15221120010DG	PLATE , BATTERY SET		1		~2004.12.29	
099	003	15221120011DG	PLATE , BATTERY SET		1		2004.12.30~	
099	004	17706210021	BOLT . BATTERY SET		2			
099	005	35605033020	WASHER , WIRE WITHDRAWAL		2			
099	006	V3002600060	NUT , HEX/1	M6	4			
099	007	15646502001	CABLE ASSY , BATTERY		1			
099	010	V3042600080	NUT , HEX/2	M8	1			
099	011	V4011600080	WASHER , SPRING	M8	1			
099	012	16001122002DG	BRACKET COMP , BATTE		1			
099	013	V2173608016	BOLT , HEX/S	M8X16	4			
099	014	16001120041	SEAL		1			
099	020	16601042340	SPONGE , 495		1			

NOTE

FIG 100	LIGHTS	P1	Month/Year
4510C			06 / 2005

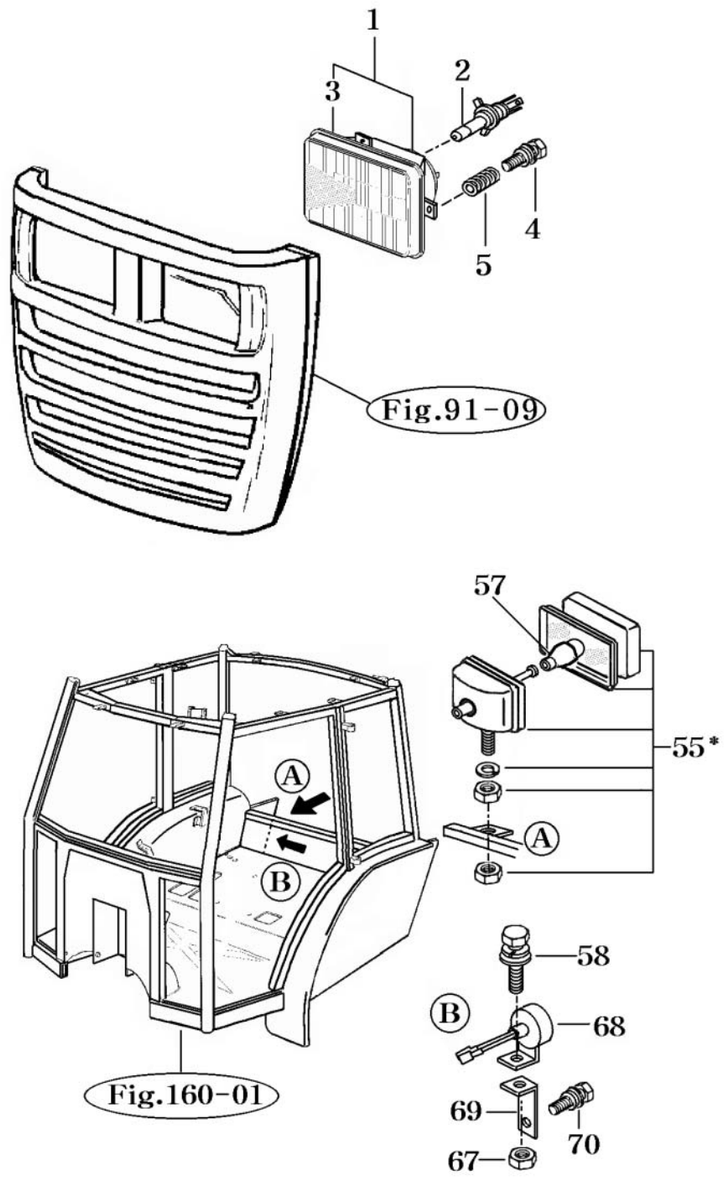

* NOT SERVICED SEPARATELY

NOTE

FIG 100	LIGHTS	P1	Month / Year
4510C			06 / 2005

KEY NO.		PART NO.	DESCRIPTION	SPEC.	QTY.	REPAIR	EFFECTIVE DATE	REMARKS
100	001	16006522001	LIGHT ASSY , HEAD		2	C		
100	002	16006522040	BULB , 12V 50/40W		2	B		
100	003	15606010154	SEAL		2			
100	004	V1112606025	SCREW , C/R PAN	M6X20	6			
100	005	16008010080	SPRING		6			
100	055	16996212200	LAMP ASSY , BACK		1	C		
100	057	16606212210	BULB		1			
100	058	V2183608020	BOLT , HEX/SP	M8X20	1			
100	067	V3052600080	NUT , HEX/3	M8	1			
100	068	34522812400	BUZZER ASSY		1	C		
100	069	17997013800	BRACKET COMP , BUZZER		1			
100	070	V2183608035	BOLT , HEX/SP	M8X35	1			

NOTE

FIG 101	INSTRUMENT PANEL	P1	Month/Year
4510C			06 / 2005

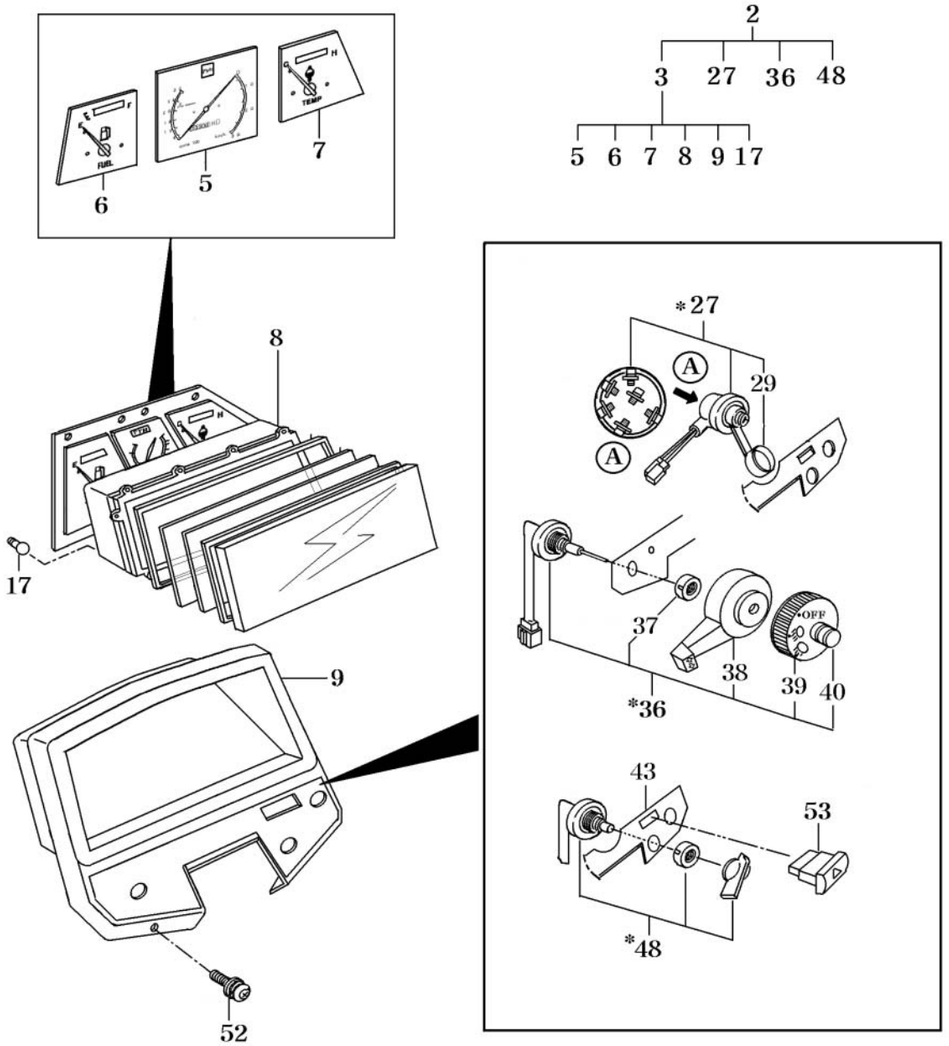

* NOT SERVICED SEPARATELY

NOTE

FIG 101	INSTRUMENT PANEL	P1	Month / Year
4510C			06 / 2005

KEY NO.		PART NO.	DESCRIPTION	SPEC.	QTY.	REPAIR	EFFECTIVE DATE	REMARKS
101	002	14516602000	PANEL SET , INSTRUMENT		1	C		
101	003	16006604100	PANEL ASSY , INSTRUMENT		1			
101	005	14516582100	METER ASSY , TACHO		1			
101	006	15606582204	METER ASSY , FUEL		1			
101	007	15236582300	METER ASSY , TEMP		1			
101	008	15646584121	HOUSING ASSY		1			
101	009	15616604111	VISOR		1			
101	017	36502702140	LAMP COMP , 12V 3.4W		13	C		
101	027	16626582402	SWITCH SET , ROTARY		1	C		
101	029	14446213110	CAP , WATERPROOF		1			
101	036	15446230010	SWITCH ASSY , COMBINATION		1	C		
101	037	15446232320	NUT , RING M22X1		1			
101	038	15446232330	LEVER , PRESSER		1			
101	039	15446232340	KNOB		1			
101	040	15446232350	BOOT , HORN		1			
101	043	12406602010	LABEL VISOR		1			
101	048	15616603100	SWITCH SET , ROTARY		1	C		
101	052	V1222606020	SCREW , C/R PAN/SP	M6X20	4			
101	053	36142612400	SWITCH		1	C		

NOTE

FIG 102	ELECTRIC SYSTEM	P1	Month/Year
4510C			06 / 2005

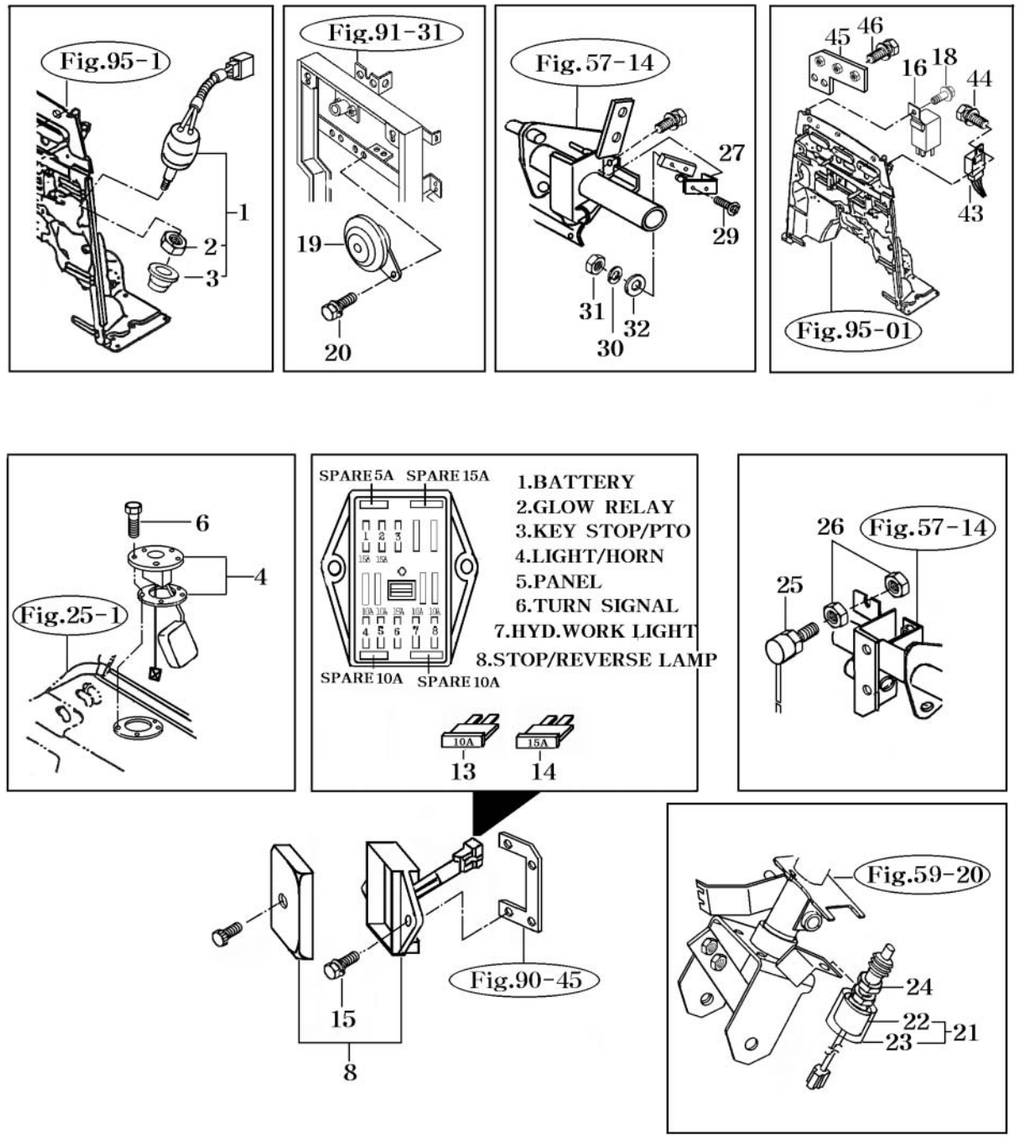

NOTE

FIG 102	ELECTRIC SYSTEM	P1	Month / Year
4510C			06 / 2005

KEY NO.		PART NO.	DESCRIPTION	SPEC.	QTY.	REPAIR	EFFECTIVE DATE	REMARKS
102	001	15606642500	SWITCH SET , PUSH		1	C		
102	002	15606642520	NUT		1			
102	003	15606642530	BOOT		1			
102	004	16746642300	GAUGE ASSY , MAIN FUEL		1	C		
102	006	V2313605012	BOLT , C/R HEX/S	M5X12	5			
102	008	12406642101	CASE ASSY , FUSE		1		~2005.08.29	
102	008	15646642106	CASE ASSY , FUSE		1		2005.08.30~	
102	013	15756230100	FUSE	32V10A	5	B		
102	014	15756230110	FUSE	32V15A	7	B		
102	015	V2323606016	BOLT , C/R HEX/SP	M6X16	2			
102	016	15606642400	FLASHER SET		1	C	~2005.01.30	
102	016	15606642401	FLASHER SET	label:gold	1	C	2005.01.31~	
102	018	V2113606020	BOLT , HEX /S	M6X20	1			
102	019	14166210440	BUZZER		1	C		
102	020	V2113606012	BOLT , HEX /S	M6X12	2			
102	021	15666642000	SWITCH , PUSH		1	C		
102	022	14916232220	NUT , M20		1			
102	023	14916232230	BOOT		1			
102	024	14916232220	NUT , M20		1			
102	025	15186213200	SWITCH ASSY , STOP LIGHT		1	C		
102	026	14326210061	NUT , LOCK M12		2			
102	027	16756214701	SWITCH ASSY , SAFETY		1	C		
102	029	V1112604030	SCREW , C/R PAN	M4X30	2			
102	030	V4011600040	WASHER , SPRING	M4	2			
102	031	V3002600040	NUT , HEX/1	M4	2			
102	032	V4111600040	WASHER , PLAIN	M4	2			
102	043	62819200010	RELAY , CONTROL/SOL		1			
102	044	V2193606016	BOLT , HEX/SPL	M6X16	1			
102	045	16006305100DG	BRACKET COMP , UNIT		1			
102	046	V2173608030	BOLT , HEX/S	M8X30	2			

NOTE

FIG 105	P.T.O CONTROL SWITCH	P1	Month/Year
4510C			06 / 2005

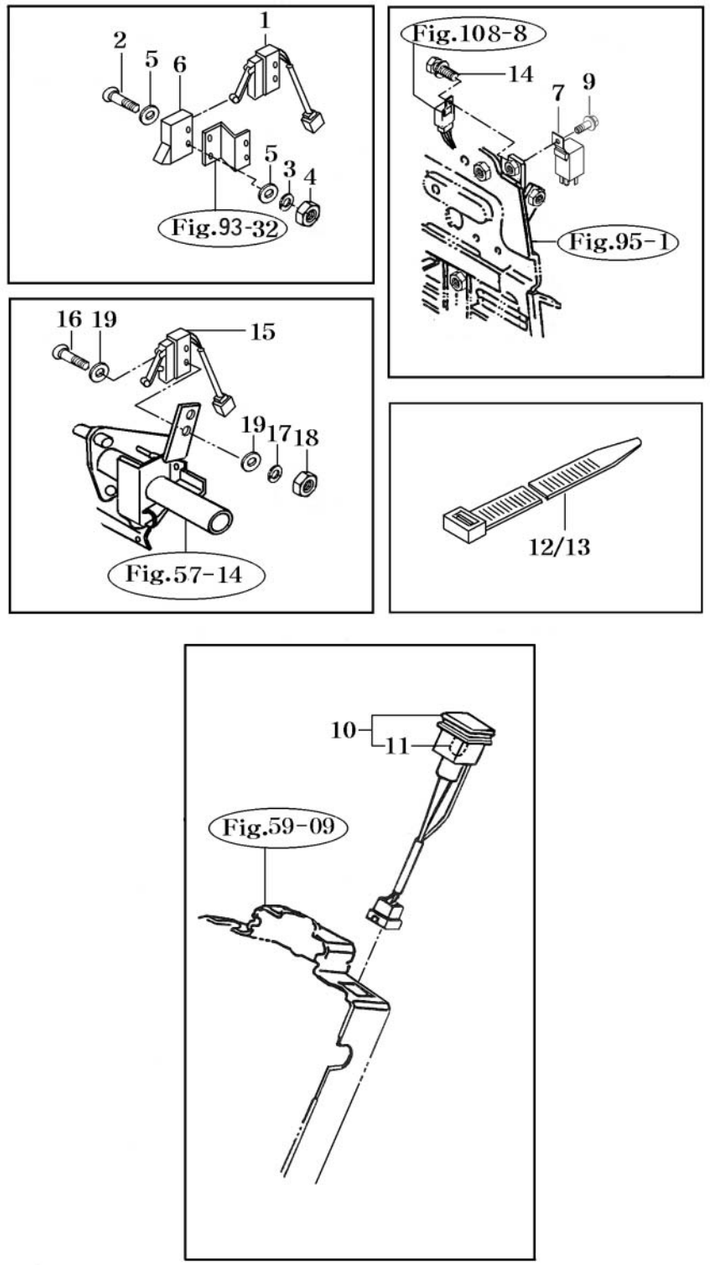

NOTE

FIG 105	P.T.O CONTROL SWITCH	P1	Month / Year
4510C			06 / 2005

KEY NO.		PART NO.	DESCRIPTION	SPEC.	QTY.	REPAIR	EFFECTIVE DATE	REMARKS
105	001	16606702100	SWITCH ASSY , LIMIT		1	C		
105	002	V1112604030	SCREW , C/R PAN	M4X30	2			
105	003	V4011600040	WASHER , SPRING	M4	2			
105	004	V3002600040	NUT , HEX/1	M4	2			
105	005	V4111600040	WASHER , PLAIN	M4	4			
105	006	14466220030	COVER		1			
105	007	15606642400	FLASHER SET		1	C	~2005.01.29	
105	007	15606642401	FLASHER SET	label:gold	1	C	2005.01.30~	
105	009	V2113606016	BOLT , HEX /S	M6X16	1			
105	010	15616743300	SWITCH ASSY , ALTERNATOR		1	C		
105	011	36502702140	LAMP COMP , 12V 3.4W		1	C		
105	012	13424020060	BAND , 250		2			
105	013	13764020030	BAND , 140		1			
105	014	V2113606012	BOLT , HEX /S	M6X12	1			
105	015	16606742301	SWITCH ASSY . LIMIT		1	C		
105	016	V1112604030	SCREW , C/R PAN	M4X30	2			
105	017	V4011600040	WASHER , SPRING	M4	2			
105	018	V3002600040	NUT , HEX/1	M4	2			
105	019	V4111600040	WASHER , PLAIN	M4	4			

NOTE

FIG 106	HARNESS (1)	P1	Month/Year
4510C			06 / 2005

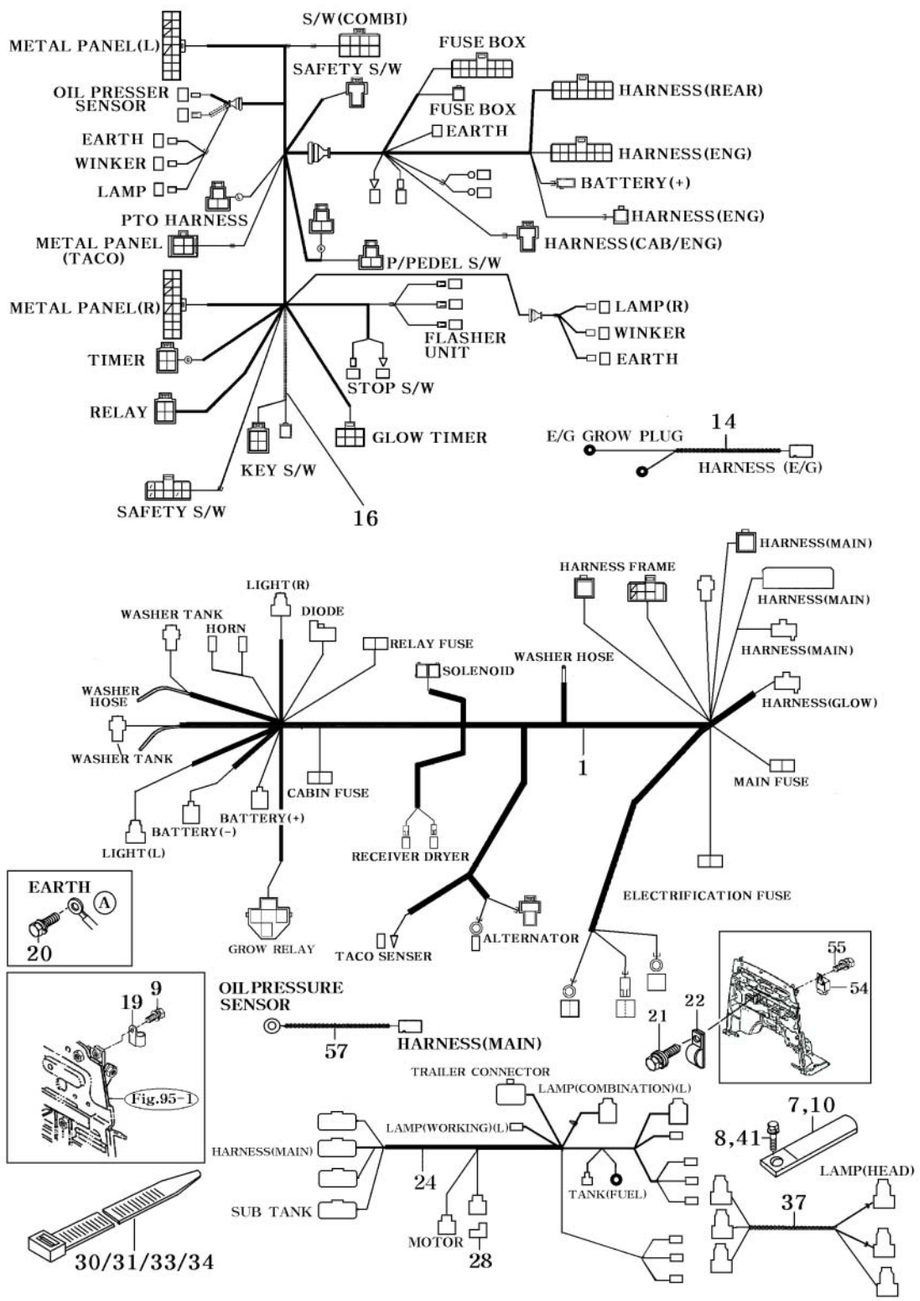

NOTE

FIG 106	HARNESS (1)	P1	Month / Year
4510C			06 / 2005

KEY NO.		PART NO.	DESCRIPTION	SPEC.	QTY.	REPAIR	EFFECTIVE DATE	REMARKS
106	001	12936682202	HARNESS ASSY , ENGINE		1			
106	007	14256210040	CLAMP , HARNESS		7			
106	008	V2173608016	BOLT , HEX/S	M8X16	2			
106	009	V2173608030	BOLT , HEX/S	M8X30	1			
106	010	37371720090	CLAMP , W/HARNESS		1			
106	014	15236682031	HARNESS , GLOW		1			
106	016	14516682000	HARNESS ASSY , MAIN		1		~2005.01.29	
106	016	14516682001	HARNESS ASSY , MAIN		1		2005.01.30~	
106	019	15816212900	RELAY ASSY , 4P		1	C		
106	020	V2183608016	BOLT , HEX/SP	M8X16	2			
106	021	14441010161	CLAMP , RADIATOR HOSE		3			
106	022	V2183608016	BOLT , HEX/SP	M8X16	2			
106	024	16796683100	HARNESS ASSY , RR		1			
106	028	15606662120	DIODE		1			
106	030	13764020030	BAND , 140		1			
106	031	15606660040	BAND		1			
106	033	13424020060	BAND , 250		12			
106	034	13424020060	BAND , 250		4			
106	037	15686682121	HARNESS , ROPS		2			
106	041	V2183608030	BOLT , HEX/SP	M8X30	1			
106	054	16626692100	TIMER , GLOW		1	C		
106	055	V2173608016	BOLT , HEX/S	M8X16	1			
106	057	16006680020	HARNESS , SENSOR		1			

NOTE

FIG 108	HARNESS (2)	P1	Month/Year
4510C			06 / 2005

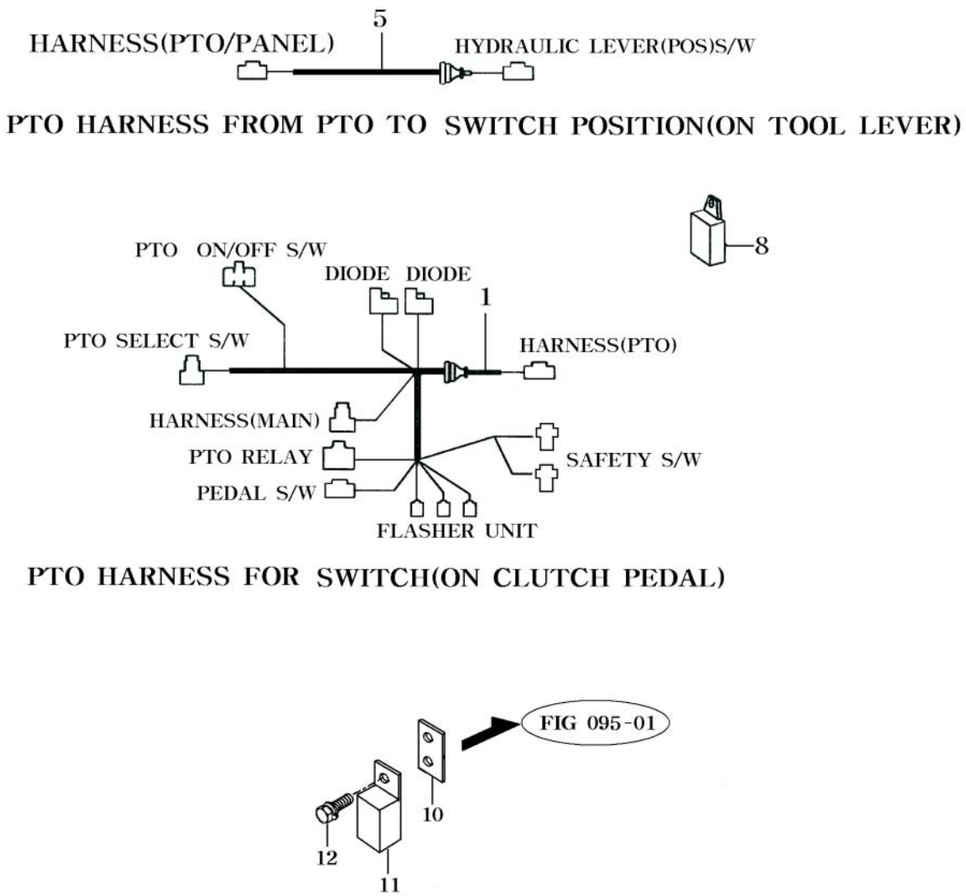

NOTE

FIG 108	HARNESS (2)	P1	Month / Year
4510C			06 / 2005

KEY NO.		PART NO.	DESCRIPTION	SPEC.	QTY.	REPAIR	EFFECTIVE DATE	REMARKS
108	001	16506722100	HARNESS ASSY , PTO		1			
108	005	15686722101	HARNESS ASSY , PTO		1			
108	008	15606642103	RELAY ASSY		2	C		
108	010	16506305200	BRACKET COMP , PTO UNIT		1			
108	011	15816212900	RELAY ASSY , 4P		1	C		
108	012	V2123606012	BOLT , HEX /SP	M6X12	1			

NOTE

FIG 124	TOOL & ACCESSORY	P1	Month/Year
4510C			06 / 2005

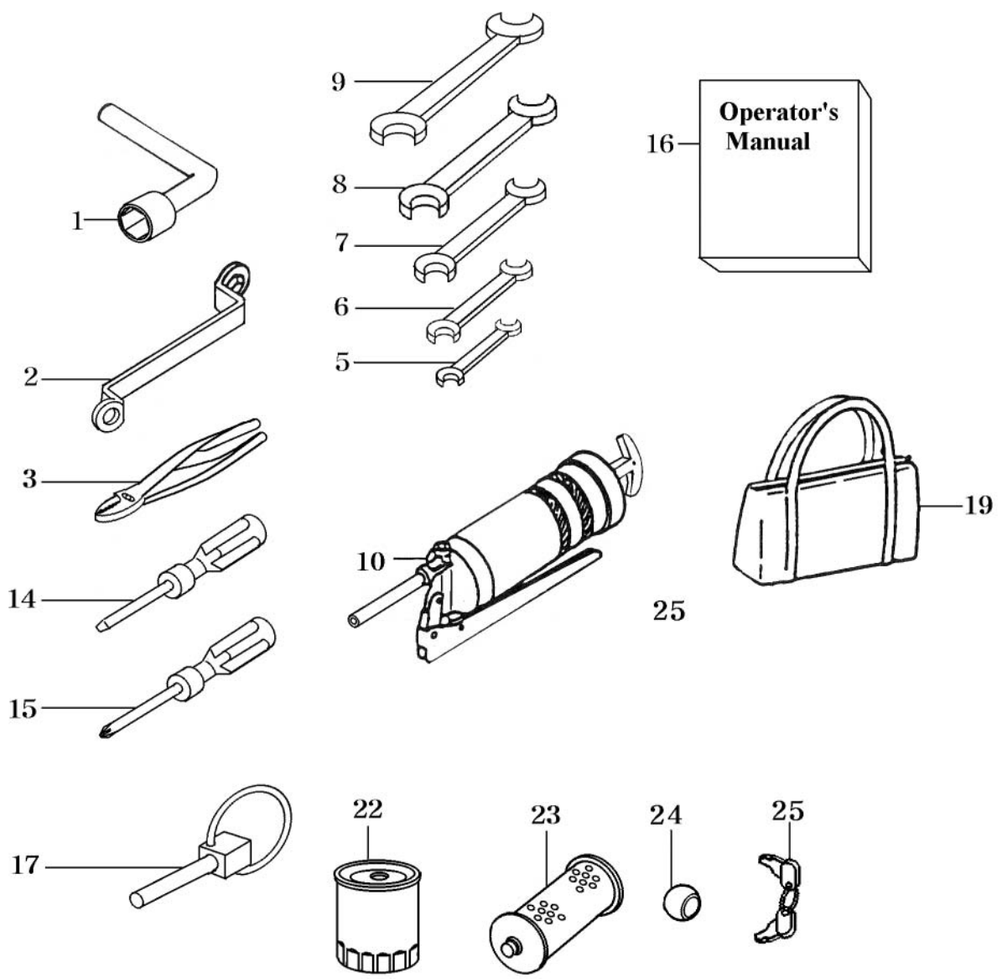

NOTE

FIG 124	TOOL & ACCESSORY	P1	Month / Year
4510C			06 / 2005

KEY NO.		PART NO.	DESCRIPTION	SPEC.	QTY.	REPAIR	EFFECTIVE DATE	REMARKS
124	001	14219060010	WRENCH , 22		1			
124	002	14019060050	SPANNER , RING		1			
124	003	V9361500150	PLIERS	150	1			
124	005	V9201508010	SPANNER , OPEN	8X10	1			
124	006	V9201512014	SPANNER , OPEN	12X14	1			
124	007	V9201513017	SPANNER , OPEN	13X17	1			
124	008	V9201519022	SPANNER , OPEN	19X22	1			
124	009	V9201524027	SPANNER , OPEN	24X27	1			
124	010	14219060031	PUMP , GREASE		1			
124	014	V9451506100	DRIVER , C/R	6X100	1			
124	015	V9411506100	DRIVER , SLOT	6X100	1			
124	016	14519400010	MANUAL , OPERATOR'S		1			
124	017	14215020020	PIN , LINK		2			
124	019	37614120021	BAG , TOOLS		1			
124	022	15001673990	CARTRIDGE , OIL		1	A	~2003.12.31	
124	022	14501673990	CARTRIDGE , OIL		1	A	2004.01.01~	
124	022	14501673991	CARTRIDGE , OIL		1	A	2004.10.28~	
124	023	15005153010	ELEMENT		1	A	~2005.05.31	
124	023	12305152100	CARTRIDGE , HYD		1	A	205.06.01~	
124	024	16505240310	BUSH , BALL		2		~2005.01.12	
124	024	14585142410	BUSH , BALL		2		2005.01.13~	
124	025	14446213201	KEY ASSY		1			

NOTE

FIG 146	LABEL	P1	Month/Year
4510C			06 / 2005

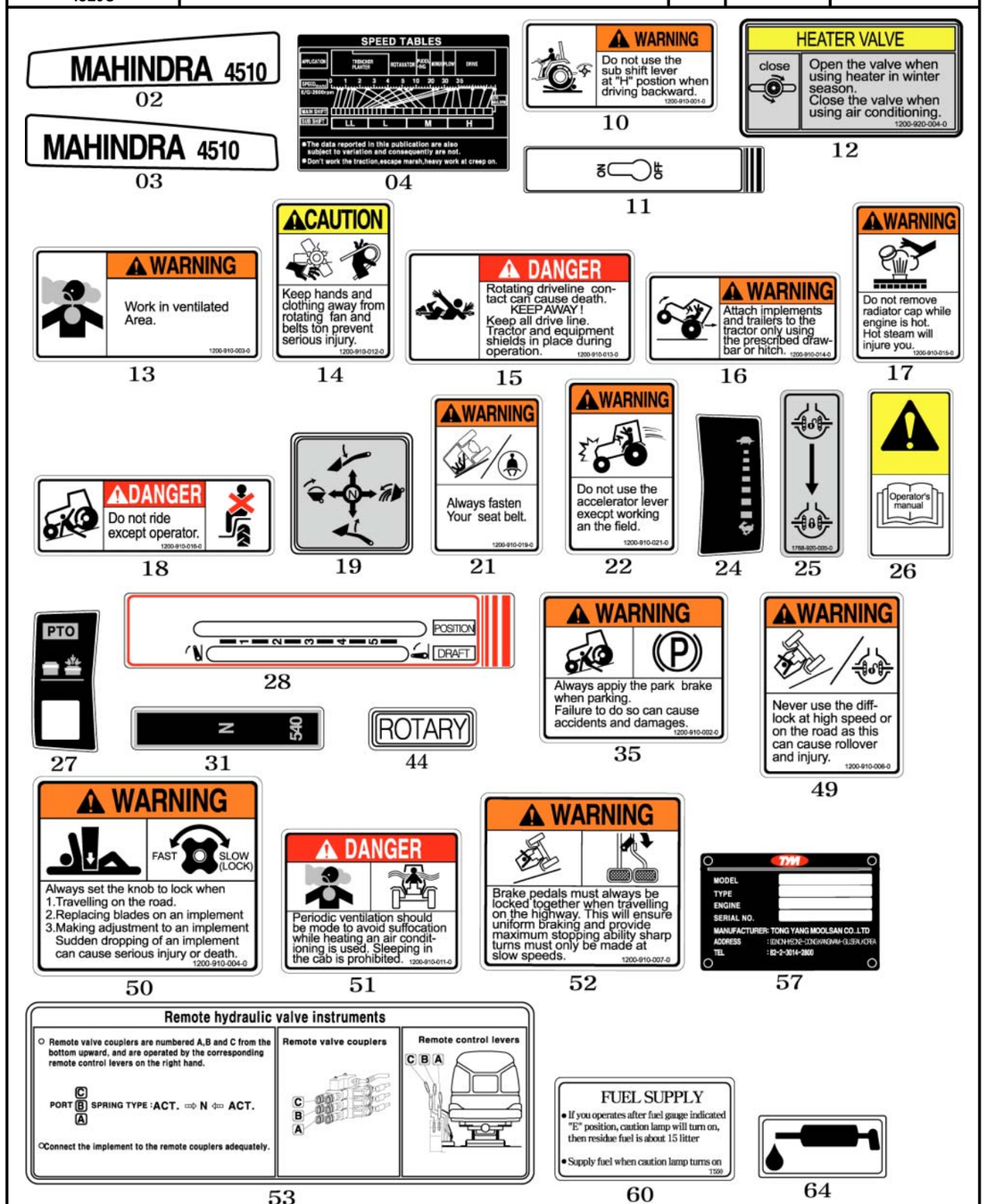

NOTE

FIG 146	LABEL	P1	Month / Year
4510C			06 / 2005

KEY NO.		PART NO.	DESCRIPTION	SPEC.	QTY.	REPAIR	EFFECTIVE DATE	REMARKS
146	002	14519010040	LABEL , 4510/LH		1			
146	003	14519010050	LABEL , 4510/RH		1			
146	004	12509010031	LABEL , SPEED		1			
146	010	12009100010	LABEL , WARNING SUB SHIFTER		1			
146	011	16999030032	LABEL . 4WD		1			
146	012	12009200040	LABEL , HEATER VALVE		1		~2005.03.04	
146	013	12009100030	LABEL , WARNING EXHAUST		1			
146	014	12009100120	LABEL , CAUTION FAN		2			
146	015	12009100130	LABEL , DANGER PTO		1			
146	016	12009100140	LABEL , WARNING DRAW		1			
146	017	12009100150	LABEL , WARNING RADIATOR		1			
146	018	12009100160	LABEL , DANGER RIDING		1			
146	019	17689100170	LABEL , CAUTION SAFETY		1			
146	021	12009100190	LABEL , WARNING BELT		1			
146	022	12009100210	LABEL , WARNING THROTTLE		1			
146	024	15609030046	LABEL , CONTROL THROTTLE		1			
146	025	17689200050	LABEL , DIFF		1			
146	026	12009100230	LABEL , CAUTION OPERATION		1			
146	027	15619030040	LABEL , CONTROL PTO		1			
146	028	12909040030	LABEL , CONTROL POSITION		1			
146	031	14519040020	MARK , PTO		1			
146	035	12009100020	LABEL , WARNING PARKING		1			
146	044	12209040030	LABEL , ROTARY		2			
146	049	12009100060	LABEL , WARNING DIFF		1			
146	050	12009100040	LABEL , WARNING STOP VALVE		1			
146	051	12009100110	LABEL , DANGER AIR CONDITIONER		1			
146	052	12209100070	LABEL , WARNING BREAK		1			
146	053	12205300040	LABEL , HYDRAULIC CONTROL		1			
146	057	T0019010020	LABEL , MODEL/EN		1			
146	060	12209041960	LABEL , FUEL		1			
146	064	16329040020	LABEL , CAUTION/GREASE		3			
146	071	12009100080	LABEL , WARNING TILTING		1			
146	073	12009100240	LABEL , CAUTION MUFFLER		1			
146	074	12009100050	LABEL , WARNING FIRE		1			
146	078	12209040070	LABEL , OIL FILTER		1		~2005.03.27	
146	079	12209040020	LABEL , CAUTION 3P		1			
146	080	12109040250	LABEL , CAUTION SPANNER		1		~2005.03.27	
146	081	12609040680	LABEL , CLUTCH		1		~2005.03.27	
146	082	12609040660	LABEL , BATTERY		1		~2005.03.27	
146	083	12209040780	LABEL , CABIN		1			
146	087	19629040050	LABEL , OIL		1		~2004.06.30	
146	087	12759040050	LABEL , OIL		1		2004.07.01~	
146	088	12209041221	LABEL , VENTRLATION		1			
146	089	12209010100	LABEL , FUSE BOX		1			
146	090	15189030060	LABEL , PORT (A)		1		2005.01.19~	
146	091	15189030070	LABEL , PORT (B)		1		2005.01.19~	
146	092	17689030080	LABEL , PORT (C)		1		2005.01.19~	

NOTE

FIG 146	LABEL	P2	Month/Year
4510C			06 / 2005

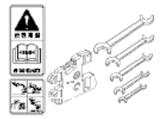

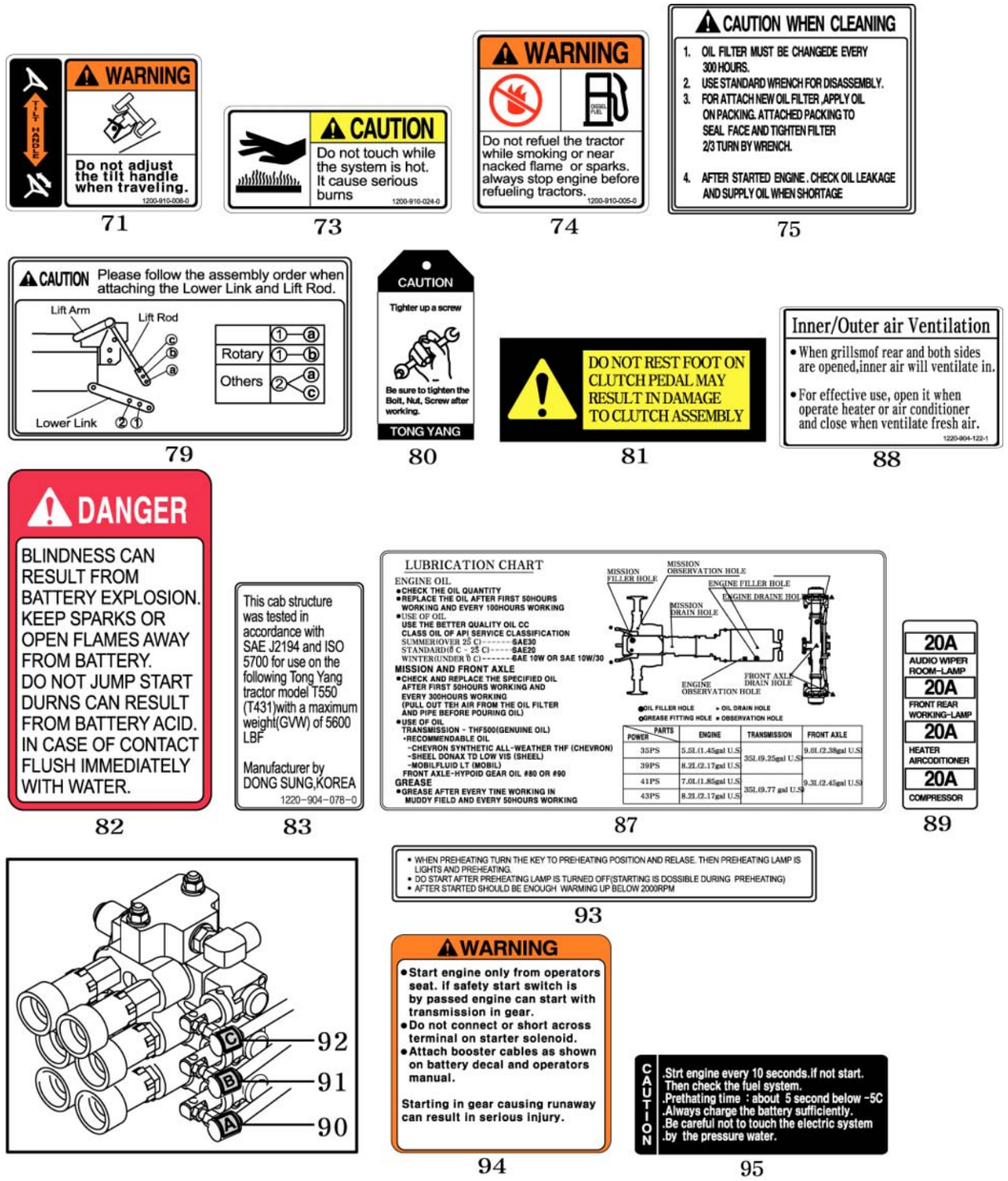

NOTE

FIG 146	LABEL	P2	Month / Year
4510C			06 / 2005

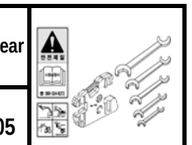

KEY NO.		PART NO.	DESCRIPTION	SPEC.	QTY.	REPAIR	EFFECTIVE DATE	REMARKS
146	093	12209040150	LABEL , CAUTION START		1		2005.03.28~	
146	094	12609040620	LABEL , STARTING WARNING		1		2005.03.28~	
146	095	12109040060	LABEL , CAUTION GLOW		1		2005.03.28~	

NOTE

FIG 157	WEIGHT	P1	Month/Year
4510C			06 / 2005

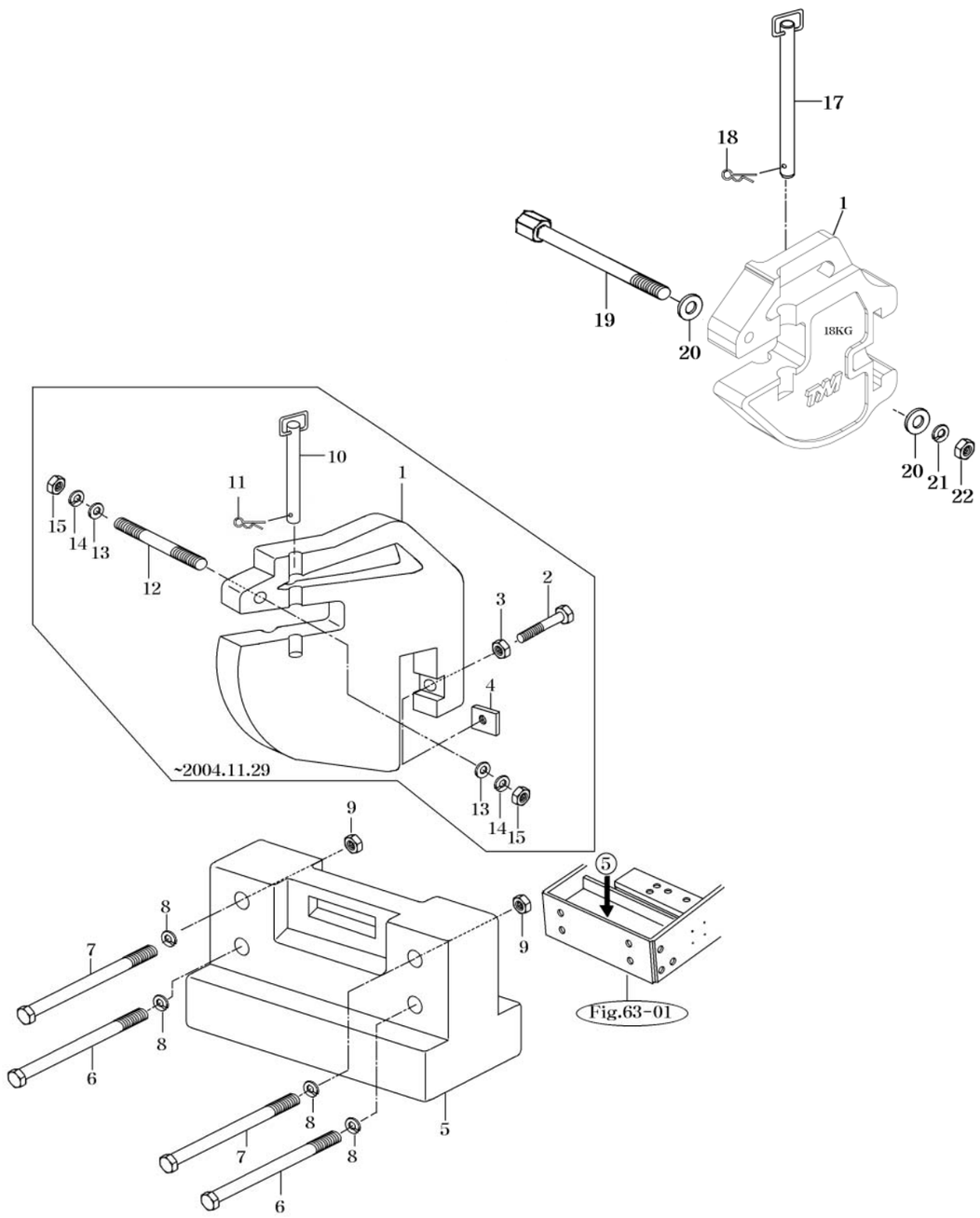

NOTE

FIG 157	WEIGHT	P1	Month / Year
4510C			06 / 2005

KEY NO.		PART NO.	DESCRIPTION	SPEC.	QTY.	REPAIR	EFFECTIVE DATE	REMARKS
157	001	16009400011DG	WEIGHT , 25KG		6		~2005.02.27	
157	001	16209400071DG	WEIGHT ,18KG		8		2005.02.28~	
157	002	W2002612080	BOLT , HEX		6		~2005.02.27	
157	003	V3022600120	NUT , HEX/3	M12	6		~2005.02.27	
157	004	16609400020DG	STOPPER , 12		6		~2005.02.27	
157	005	15609511000DG	WEIGHT , BALANCE F		1			
157	006	V2004612100	BOLT , HEX	M12X100	2			
157	007	V2013612040	BOLT , HEX	M12X40	2			
157	008	V4011600120	WASHER , SPRING	M12	4			
157	009	V3043600120	NUT , HEX/2	M12	2			
157	010	16009402300	PIN COMP , TRACTION		1		~2005.02.27	
157	010	16204100150	PIN COMP , TRACTION		1		2005.02.28~	
157	011	S2169908420	PIN , SNAP/28		1			
157	012	16009400040	BOLT , WEIGHT FIXED		1		~2005.02.27	
157	012	17979291990	BOLT , WEIGHT(M14)		1		2005.02.28~	
157	013	V4111600140	WASHER , PLAIN	M14	2			
157	014	V4011600140	WASHER , SPRING	M14	2		~2005.02.27	
157	014	V4011600140	WASHER , SPRING	M14	1		2005.02.28~	
157	015	V3043600140	NUT , HEX/2	M14	4		~2005.02.27	
157	015	V3043600140	NUT , HEX/2	M14	1		2005.02.28~	

NOTE Option

FIG 160	FRAME & REAR GLASS	P1	Month/Year
4510C			06 / 2005

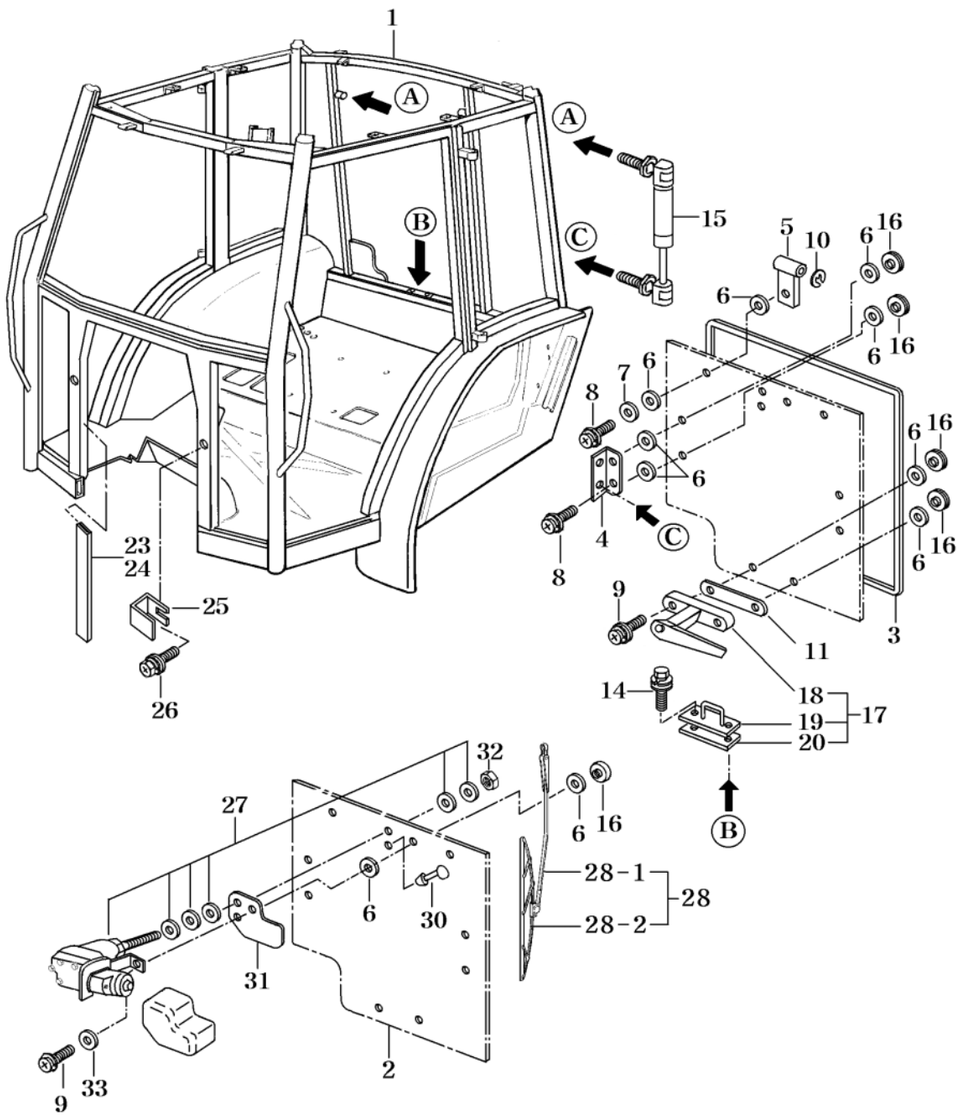

NOTE

FIG 160	FRAME & REAR GLASS	P1	Month / Year
4510C			06 / 2005

KEY NO.		PART NO.	DESCRIPTION	SPEC.	QTY.	REPAIR	EFFECTIVE DATE	REMARKS
160	001	16747012101DG	FRAME COMP, CAB T431		1			
160	002	16997010012	GLASS , RR		1	C		
160	003	16997010021	INSULATOR , RR GLASS		1	B		
160	004	16997023900DG	BRACKET COMP , RR AB		2			
160	005	15817401120DG	HINGE		2			
160	006	15817401130	GROMMET , 13X17X02		16			
160	007	15817401140DG	WASHER , 7X36X3		2			
160	008	V1212606016	SCREW , C/R PAN/S	M6X16	7			
160	009	V1212606020	SCREW , C/R PAN/S	M6X20	2			
160	010	V7081400070	E-RING	7	2			
160	011	16607425821	INSULATOR		1			
160	014	V2123606020	BOLT , HEX /SP	M6X20	2			
160	015	16997022200	DAMPER ASSY , RR DOOR		2			
160	016	15817421020	NUT , GLASS		7			
160	017	16607202100	HANDLE SET , WINDOW LOCK		1			
160	018	16607202200	HANDLE ASSY , WINDOW LOCK		1			
160	019	16607202300	PLATE COMP , LOCK		1			
160	020	15187455520	PLATE , ARM A		1			
160	023	16997017600	INSULATOR , LH FRAME		1			
160	024	16997017610	INSULATOR , RH FRAME		1			
160	025	16997018011	PLATE		2			
160	026	V1122606016	SCREW , C/R FLAT	M6X16	2			
160	027	16997032000	MOTOR ASSY , WIPER		1			
160	028	16997033400	WIPER & BLADE ASSY , RR		1			
160	02801	16997034100	ARM , 258		1			
160	02802	16997035100	BLADE , 300		1			
160	030	16997027700	NOZZLE SET		1			
160	031	14517030030	LABEL , COVER		1		~2005.10.29	
160	031	17677030030	LABEL , COVER		1		2005.10.30~	
160	032	V3802600080	NUT , HEX FLANGE		1			
160	033	35605033020	WASHER , WIRE WITHDRAWAL		1			

NOTE

FIG 161	SIDE GLASS	P1	Month/Year
4510C			06 / 2005

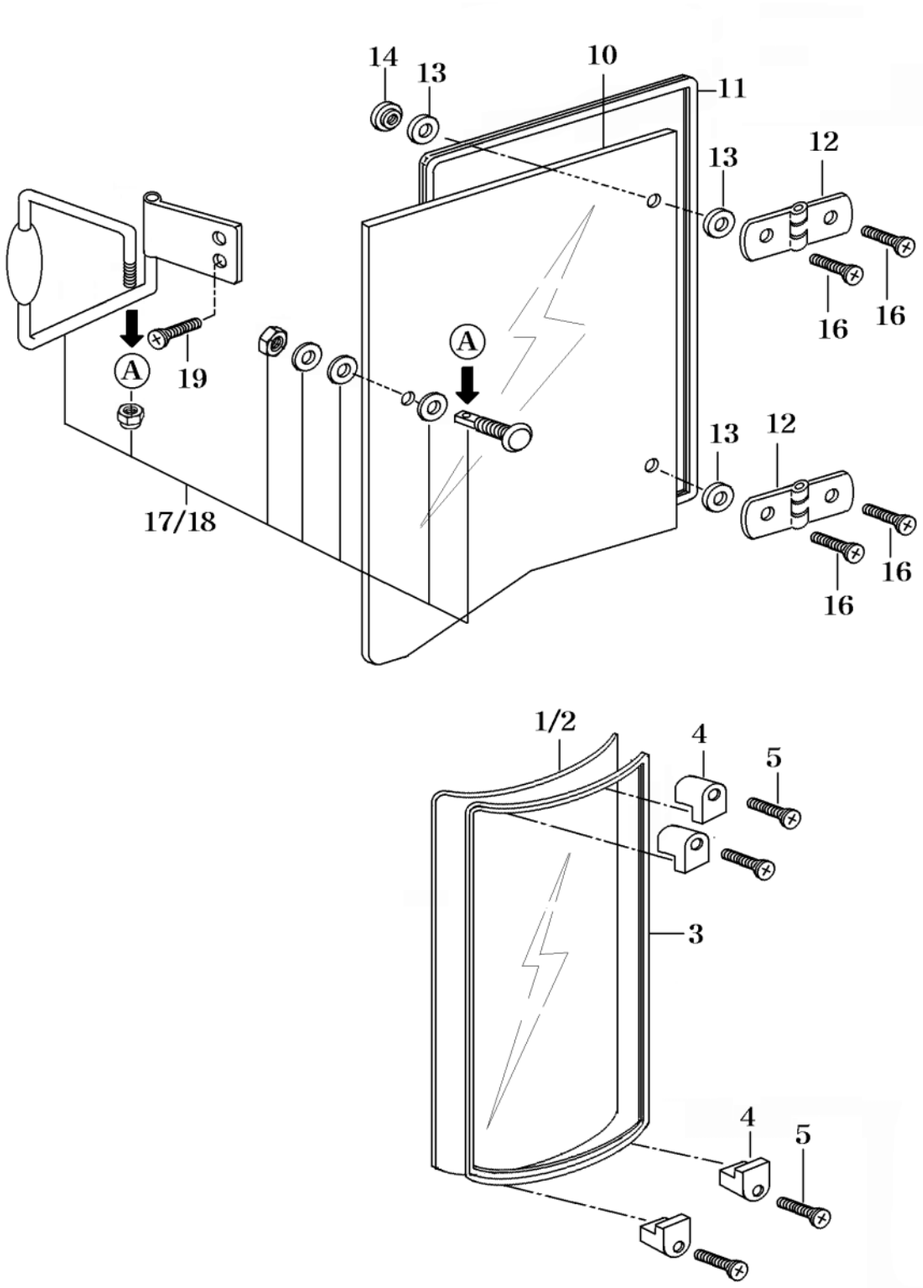

NOTE

FIG 161	SIDE GLASS	P1	Month / Year
4510C			06 / 2005

KEY NO.		PART NO.	DESCRIPTION	SPEC.	QTY.	REPAIR	EFFECTIVE DATE	REMARKS
161	001	16997020031	GLASS , LH C		1	C		
161	002	16997020041	GLASS , LH C		1	C		
161	003	16997020051	INSULATOR		2	C		
161	004	16997010061	BRACKET , FIXED GLASS		8			
161	005	V1122605035	SCREW , C/R FLAT	M5X35	8			
161	010	16997020071	GLASS , B		2	C		
161	011	16997010081	INSULATOR		2	B		
161	012	16997010091	HINGE , GLASS B		4			
161	013	15817401130	GROMMET , 13X17X02		8			
161	014	15817421020	NUT , GLASS		4			
161	016	V1122606020	SCREW , C/R FLAT	M6X20	8			
161	017	16997012300	LOCK SET , DOOR		1			
161	018	16997012400	LOCK SET , DOOR		1			
161	019	V1122606016	SCREW , C/R FLAT	M6X16	4			

NOTE

FIG 162	DOOR	P1	Month/Year
4510C			06 / 2005

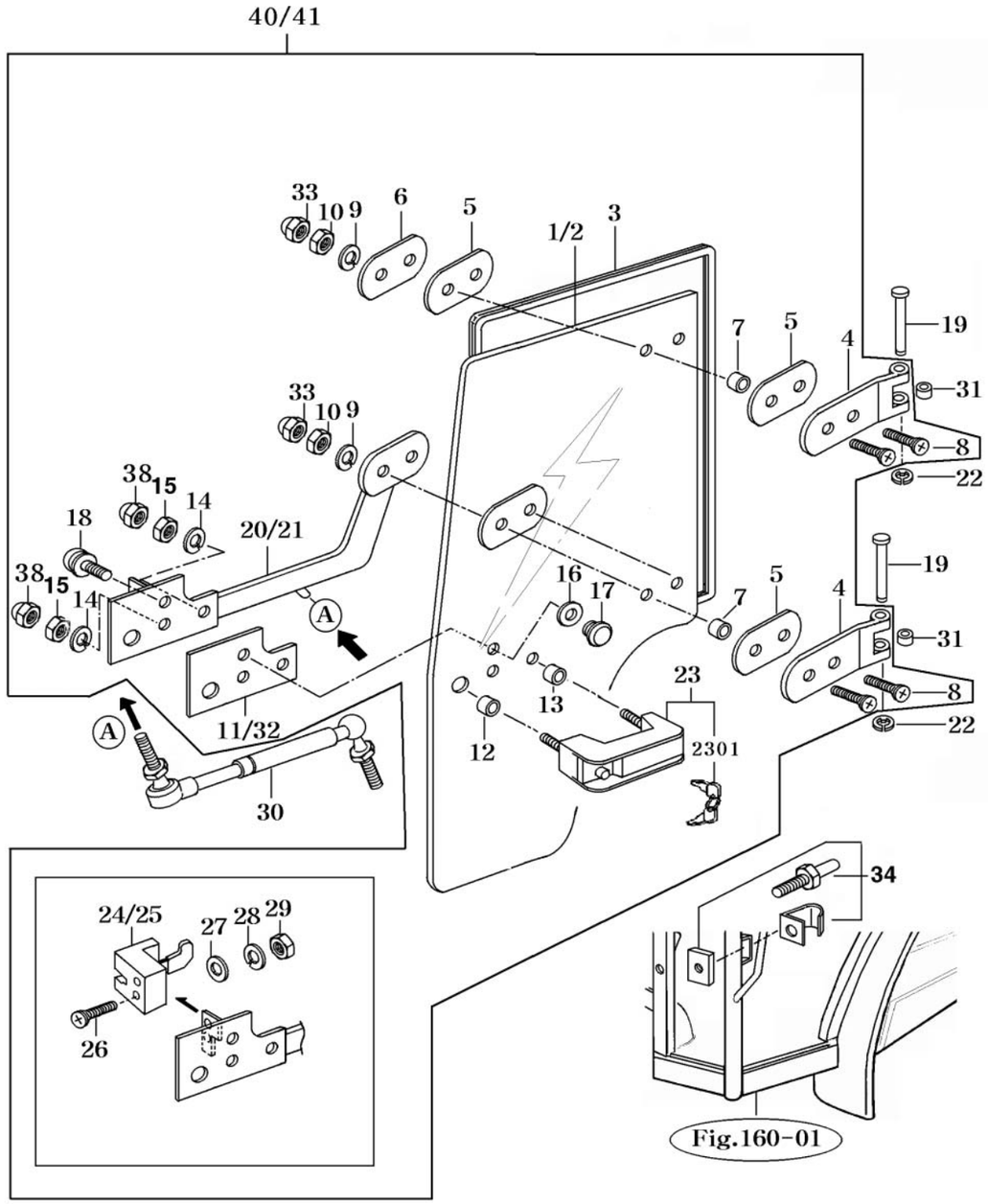

Fig.160-01

NOTE

FIG 162	DOOR	P1	Month / Year
4510C			06 / 2005

KEY NO.	PART NO.	DESCRIPTION	SPEC.	QTY.	REPAIR	EFFECTIVE DATE	REMARKS
162 001	16997010151	GLASS , LH DOOR		1	C		
162 002	16997010161	GLASS , RH DOOR		1	C		
162 003	16997010172	INSULATOR , DOOR		2	B		
162 004	16997022501DG	HINGE COMP , DOOR		4			
162 005	16997010180	GROMMET , DOOR		8			
162 006	16997010190DG	PLATE , DOOR GLASS		2			
162 007	16997010210	COLLAR , 8.5X13X10.5		8			
162 008	V1122608030	SCREW , C/R FLAT	M8X30	8			
162 009	V4011600080	WASHER , SPRING	M8	8			
162 010	V3043600080	NUT , HEX/2	M8	8			
162 011	16997010220	GROMMET , DOOR		1			
162 012	16997010230	COLLAR , 6.5X9X10.5		2			
162 013	16997010240	COLLAR , 6.5X9X9.5		2			
162 014	V4011600060	WASHER , SPRING	M6	4			
162 015	V3002600060	NUT , HEX/1	M6	4			
162 016	15817401130	GROMMET , 13X17X02		2			
162 017	15817421020DG	NUT , GLASS		2			
162 018	V1212606016	SCREW , C/R PAN/S	M6X16	2			
162 019	16997010251	PIN , DOOR HINGE		4			
162 020	16997022601DG	GUIDE COMP , LH DOOR		1		~2005.03.14	
162 020	17687022601DG	GUIDE COMP , LH DOOR		1		~2006.04.30	
162 020	16997022602DG	GUIDE COMP , LH DOOR		1		2006.05.01~	
162 021	16997022701DG	GUIDE COMP , RH DOOR		1		~2005.03.14	
162 021	17687022701DG	GUIDE COMP , RH DOOR		1		~2006.04.30	
162 021	16997022702DG	GUIDE COMP , RH DOOR		1		2006.05.01~	
162 022	V7081400080	E-RING	8	4			
162 023	16997028900	GRIP ASSY , LOCK		2			
162 02301	16997028990	KEY		2			
162 024	16997022800	LOCK SET , LH		1		~2004.07.04	
162 024	16997022810	LOCK SET , LH		1		2004.07.05~	
162 025	16997022900	LOCK SET , RH		1		~2004.07.04	
162 025	16997022910	LOCK SET , RH		1		2004.07.05~	
162 026	V1122608040	SCREW , C/R FLAT	M8X40	4			
162 027	V4111600080	WASHER , PLAIN	M8	4			
162 028	V4011600080	WASHER , SPRING	M8	4			
162 029	V3043600080	NUT , HEX/2	M8	4			
162 030	16997301081	DAMPER ASSY , DOOR		2			
162 031	15645120010	BUSH , 10X18X10		8			
162 032	16997010290	GROMMET , DOOR		1			
162 033	V3402700080	NUT , HEX CAP	M8	8			
162 034	16997011110	NUT , LOCK DOOR	M10	2		~2004.07.04	
162 034	16997022820	PIN ASSY , ROD DOOR		2		2004.07.05~	
162 038	V3402700060	NUT , HEX CAP	M6	4			
162 040	16997020000	GLASS SUB , LH DOOR		1			
162 041	16997021000	GLASS SUB , RH DOOR		1			

NOTE

FIG 163	FRONT GLASS	P1	Month/Year
4510C			06 / 2005

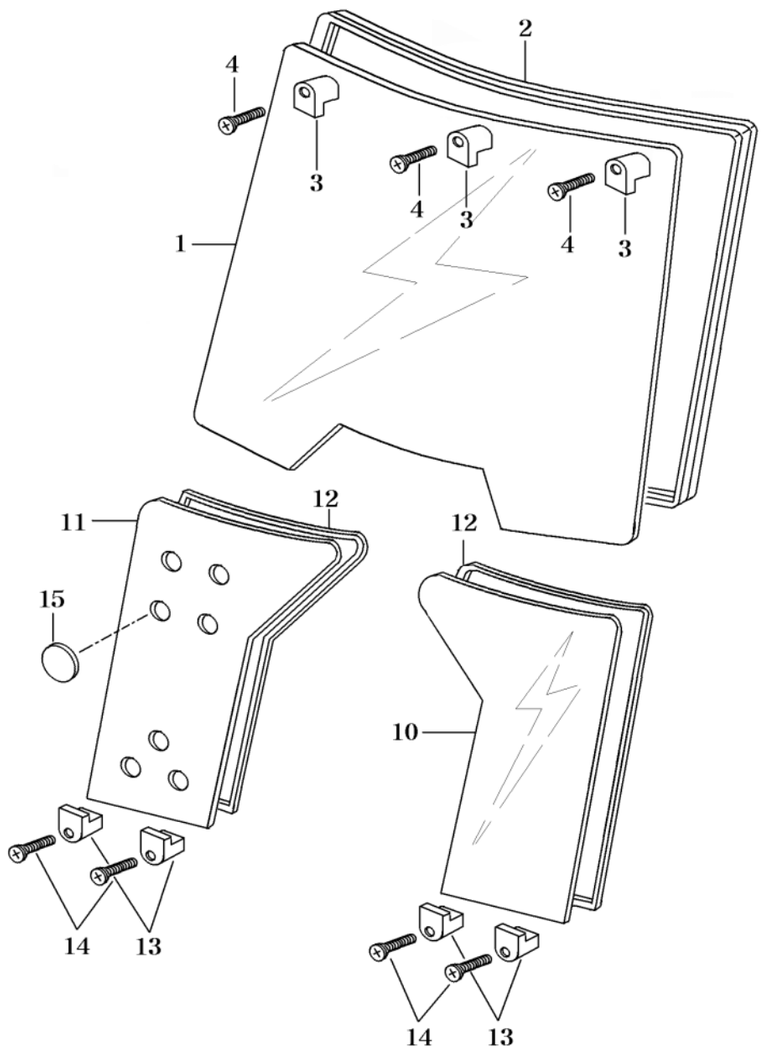

NOTE

FIG 163	FRONT GLASS	P1	Month / Year
4510C			06 / 2005

KEY NO.		PART NO.	DESCRIPTION	SPEC.	QTY.	REPAIR	EFFECTIVE DATE	REMARKS
163	001	16997010260	GLASS , FR UPR		1	C		
163	002	16997010271	INSULATOR , UPR GLASS		1	B		
163	003	16997010282	BRACKET , FIXED GLASS		3			
163	004	V1122605035	SCREW , C/R FLAT	M5X35	3			
163	010	16997010310	GLASS , FR LOW LH		1	C		
163	011	16997010322	GLASS , FR LOW RH		1	C		
163	012	16997010331	INSULATOR , FR GLASS		2	C		
163	013	16997010061	BRACKET , FIXED GLASS		4			
163	014	V1122605035	SCREW , C/R FLAT	M5X35	4			
163	015	16606510210	CAP , RUBBER 30		6			

NOTE

FIG 164	FENDER & COVER	P1	Month/Year
4510C			06 / 2005

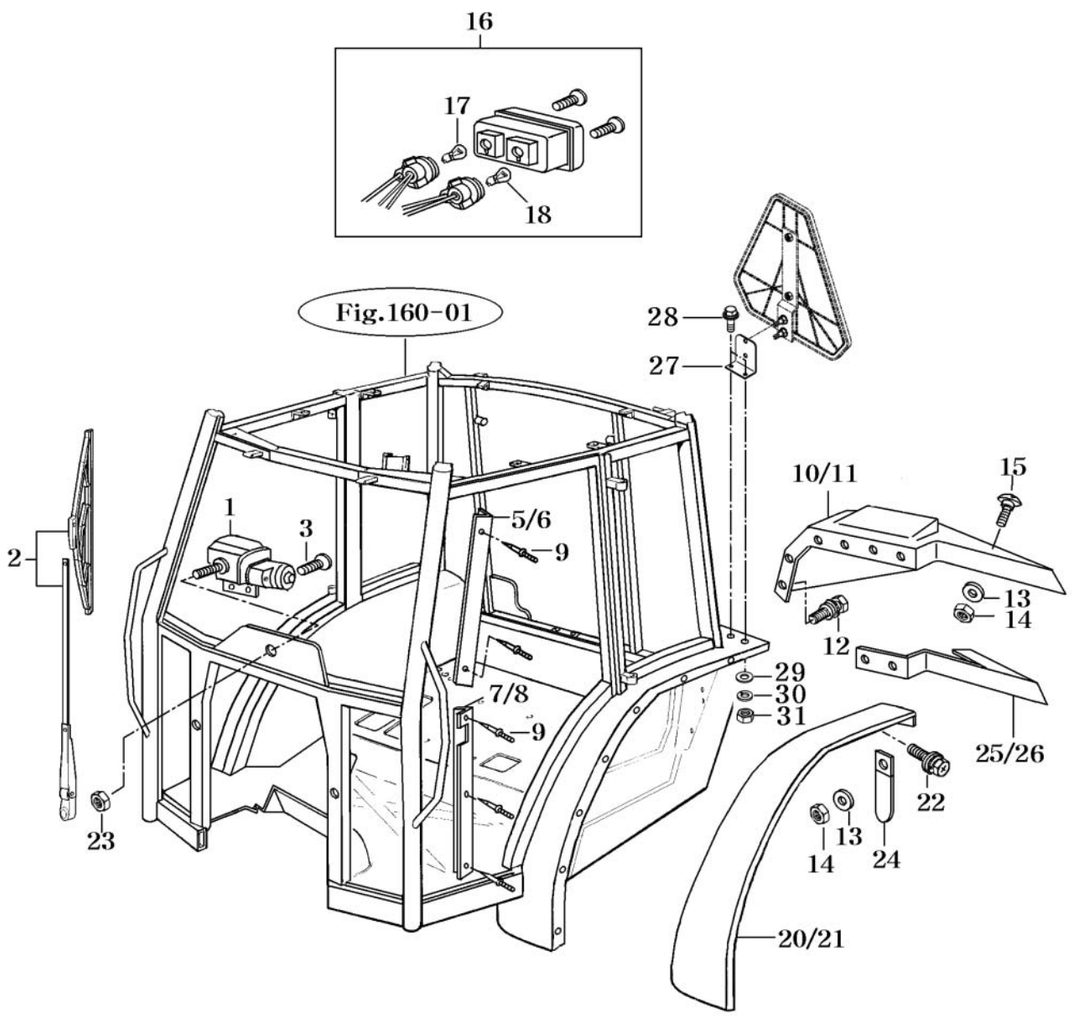

NOTE

FIG 164	FENDER & COVER	P1	Month / Year
4510C			06 / 2005

KEY NO.		PART NO.	DESCRIPTION	SPEC.	QTY.	REPAIR	EFFECTIVE DATE	REMARKS
164	001	16997023100	MOTOR ASSY , WIPER MOTOR FR		1	C		
164	002	16997023200	ARM & WIPER , ASSY		1	A		
164	003	16997021950	SCREW , M5X16	M5X16	2			
164	005	16997011991	COVER , UPR LH POST		1			
164	006	16997011981	COVER , UPR RH POST		1			
164	007	16997011970	COVER , LOW LH POST		1			
164	008	16997010340	COVER , LOW RH POST		1			
164	009	16996043100	RIVET		18			
164	010	16007010351	GUARD , LH MUD		1			
164	011	16007010361	GUARD , RH MUD		1			
164	012	V2193606025	BOLT , HEX/SPL	M6X25	4			
164	013	V4111600060	WASHER, PLAIN	M6	6			
164	014	V3002600060	NUT,HEX/1	M6	6			
164	015	16996043100	RIVET		2			
164	016	16007023300	LAMP ASSY , COMBINATION		2	C		
164	017	15646542130	BULB , 12V 21W		2	B		
164	018	15666562110	BULB , 12V 21/5W		2	B		
164	020	16007010410	FENDER , LH SUB		1			
164	021	16007010420	FENDER , RH SUB		1			
164	022	V2193606020	BOLT , HEX/SPL	M6X20	22			
164	023	V3802600080	NUT , HEX FLANGE	M8	1			
164	024	14256210040	CLAMP , HARNESS		4			
164	025	16007018100DG	BRACKET COMP , LH MU		1			
164	026	16007019100DG	BRACKET COMP , MUD G		1			
164	027	14519020980DG	BRACKET , SMV		1		2004.05.01~	
164	028	V2183608020	BOLT , HEX/SP	M8X20	2		2004.05.01~	
164	029	V4111600080	WASHER, PLAIN	M8	2		2004.05.01~	
164	030	V4011600080	WASHER, SPRING	M8	2		2004.05.01~	
164	031	V3042600080	NUT	M8	2		2004.05.01~	

NOTE

FIG 165	CONTROL COVER	P1	Month/Year
4510C			06 / 2005

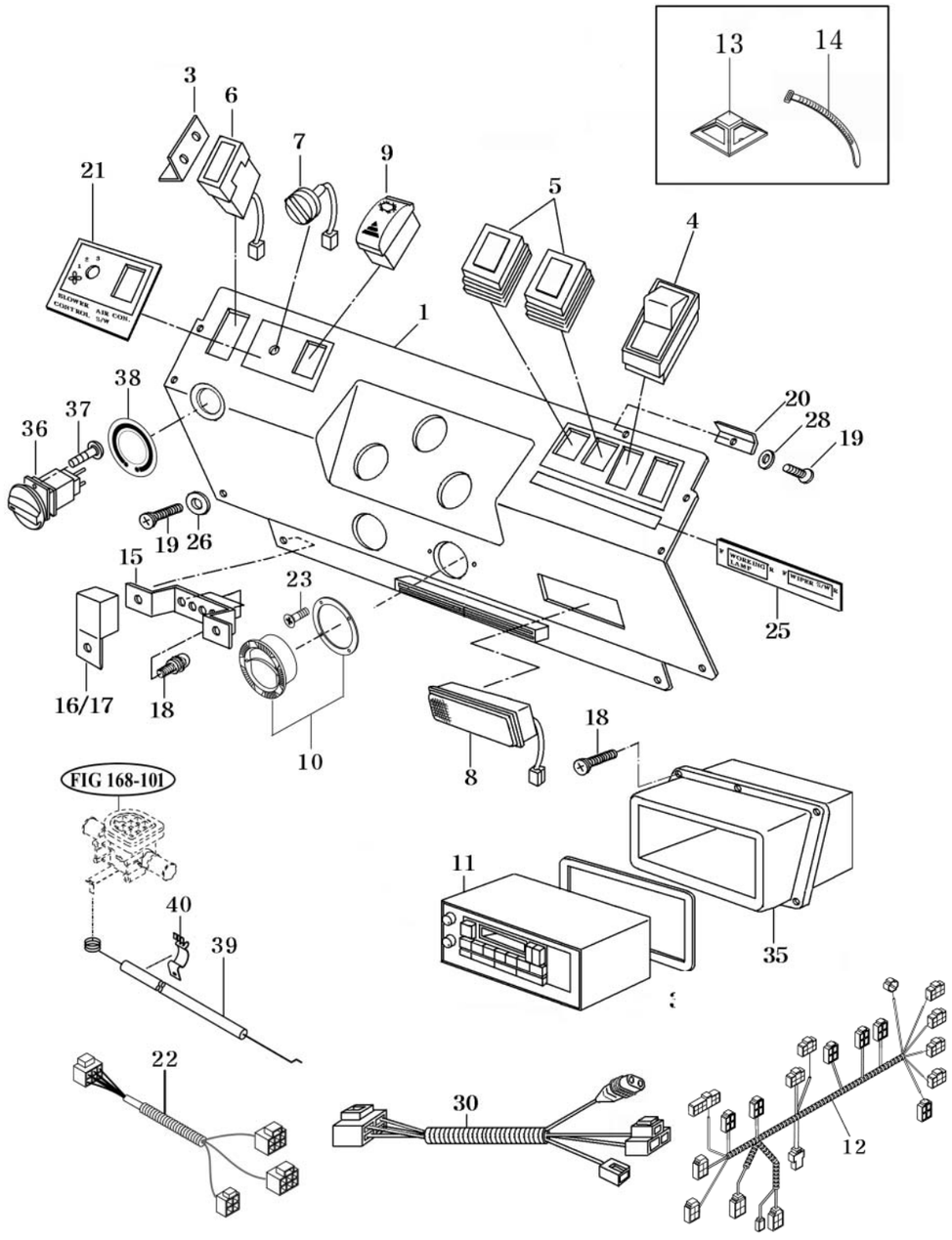

NOTE

FIG 165	CONTROL COVER	P1	Month / Year
4510C			06 / 2005

KEY NO.		PART NO.	DESCRIPTION	SPEC.	QTY.	REPAIR	EFFECTIVE DATE	REMARKS
165	001	16997010515	COVER , E/V		1		~2005.03.04	
165	001	16997010516	COVER , E/V		1		2005.03.05~	
165	003	16997024200DG	BRACKET COMP , FUSE		1			
165	004	16608103100	SWITCH ASSY , WIPER		2	C		
165	005	36522732400	SWITCH ASSY , ALTERNATOR		2	C		
165	006	16997024300	CASE ASSY , FUSE		1			
165	007	16997024401	SWITCH		1	C		
165	008	16997024500	LAMP ASSY , ROOM		1	C		
165	009	16997024601	SWITCH ASSY , AIRCONDITIONER		1	C		
165	010	16997024700	COVER ASSY , GRILLE		5			
165	011	16997024801	CASSETTE ASSY		1	C	~2004.08.14	
165	011	16997024802	CASSETTE ASSY		1	C	2004.08.15~	
165	012	17407024900	HARNESS ASSY , CAB MAIN		1			
165	013	16606691000	BRACKET , HARNESS		5			
165	014	16606691080	BAND , HARNESS		5			
165	015	16997025100DG	BRACKET COMP , RELAY		1			
165	016	15606642103	RELAY ASSY		2	C		
165	017	15816212900	RELAY ASSY , 4P		5	C		
165	018	V1222806016	SCREW , C/R PAN/SP	M6X16	11			
165	019	16997021950	SCREW , M5X16		13			
165	020	16997025200DG	BRACKET COMP , COVER		3			
165	021	16997021990	LABEL , AIR CONDITIONER CONTROL		1		~2005.03.04	
165	021	16997021991	LABEL , AIR CONDITIONER CONTROL		1		2005.03.05~	
165	022	16997021980	DRAWING , AIR CONDITIONER WIRING		1			
165	023	16992604120	SCREW		10			
165	025	17407021910	LABEL , WORKING LAMP		1			
165	026	16997013020	WASHER , EVAPORATOR COVER		8			
165	028	16007013030	WASHER , EVAPORATOR COVER		3			
165	030	17407019990	HARNESS , CASSETTE		1			
165	031	S7557010550	INSULATOR . RADIO		1			
165	035	17407021660	COVER , CASSETTE		1		~2004.08.14	
165	035	17407021661	COVER , CASSETTE		1		2004.08.15~	
165	036	17687025000	SWITCH ASSY , HEATER		1		2005.03.05~	
165	037	V1902604008	SCREW , TAPPING C/R PAN		2		2005.03.05~	
165	038	16997021930	LABEL , WATER VALVE		1		2005.03.05~	
165	039	16997026800	CABLE , WATER VALVE		1		2005.03.05~	
165	040	17687025300	CLIP , CABLE		1		2005.03.05~	

NOTE

FIG 166	ROOF	P1	Month/Year
4510C			06 / 2005

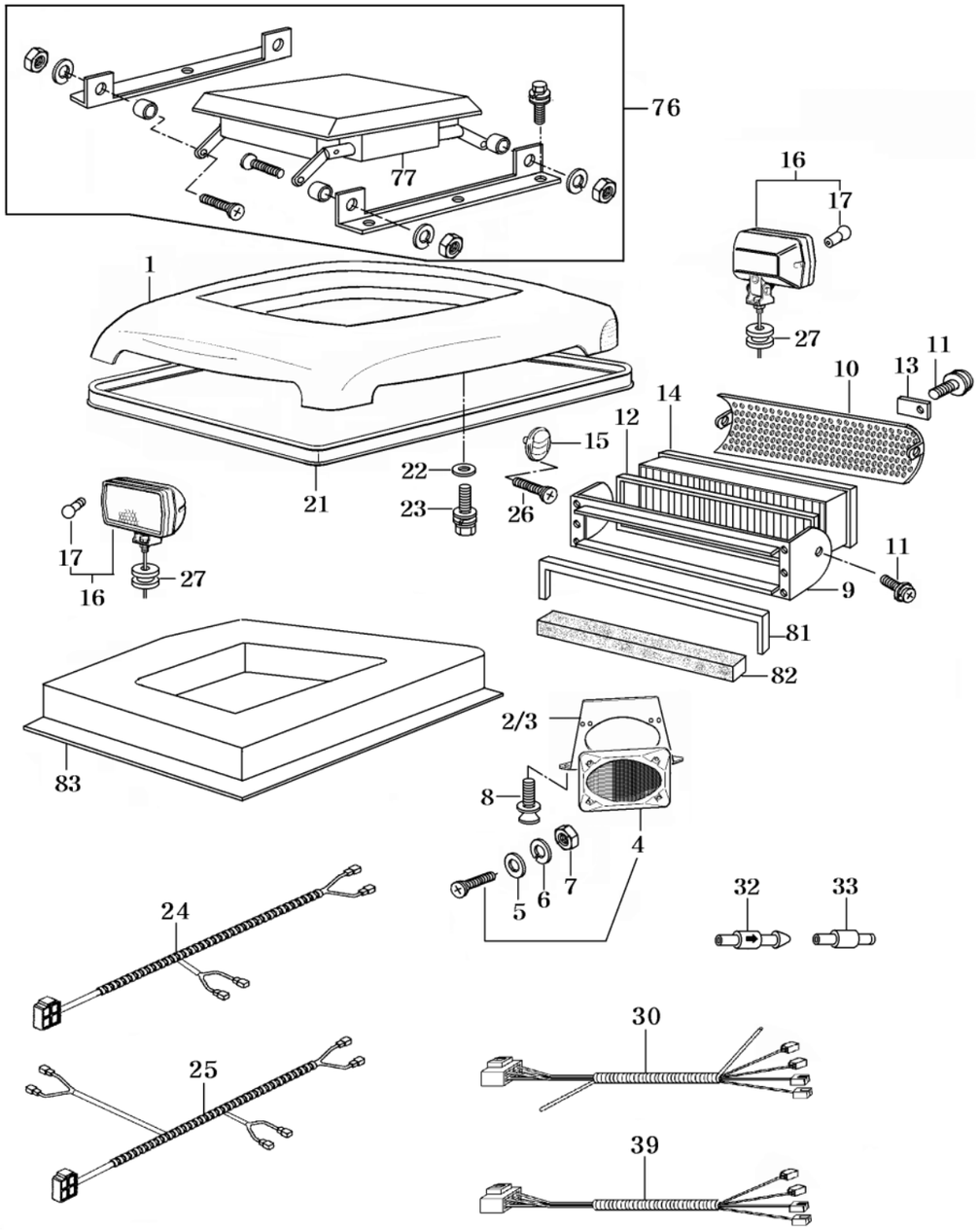

NOTE

FIG 166	ROOF	P1	Month / Year
4510C			06 / 2005

KEY NO.		PART NO.	DESCRIPTION	SPEC.	QTY.	REPAIR	EFFECTIVE DATE	REMARKS
166	001	16007010522	ROOF		1			
166	002	16997010531	COVER , LH SPEAKER		1			
166	003	16997010541	COVER , RH SPEAKER		1			
166	004	16997025501	GRILLE ASSY , SPEAKER		2			
166	005	V4111600040	WASHER , PLAIN	M4	8			
166	006	V4011600040	WASHER , SPRING	M4	8			
166	007	V3012600040	NUT , HEX/2	M4	8			
166	008	V1222806016	SCREW , C/R PAN/SP	M6X16	10			
166	009	16997025600DG	GUIDE COMP , AIR FIL		1			
166	010	16997025701DG	COVER , AIR FILTER		1			
166	011	V1222806016	SCREW , C/R PAN/SP	M6X16	14			
166	012	16997010550	INSULATOR , AIR FILTER		1			
166	013	16997010560DG	BRACKET , AIR FILTER		2			
166	014	16997025800	ELEMENT , AIR		1			
166	015	16997024700	COVER ASSY , GRILLE		4			
166	016	16997025900	LAMP ASSY , WORKING		4	C		
166	017	16996549160	BULB , 12V 35W		4	B		
166	021	16997010582	INSULATOR , FRAME		1			
166	022	35602010150	WASHER , BIND SHAFT		12			
166	023	V2183608030	BOLT , HEX/SP	M8X30	8			
166	024	17407017400	HARNESS , SPEAKER		1			
166	025	16997017500	HARNESS , WORKING LAMP		1			
166	026	16992604120	SCREW		8			
166	027	14326510210	CAP , RUBBER 20		4			
166	030	16997028500	HARNESS ASSY , RR WIPER		1			
166	032	16997030010	VALVE , WASHER CHECK		1			
166	033	16997030020	NIPPLE , WASHER HOSE		1			
166	039	16997030040	HARNESS ASSY , CONNECTOR WIPER		1			
166	076	16007020500	ROOF , ASSISTANCE		1			
166	077	16007020600	SEAT , ASSISTANCE ROOF		1			
166	081	16997010720	INSULATOR , MID FILTER GUIDE		1			
166	082	16997010730	INSULATOR , UNDER FILTER GUIDE		1			
166	083	16007026100	SEAT , ROOF		1			

NOTE

FIG 167	INTERIOR PARTS	P1	Month/Year
4510C			06 / 2005

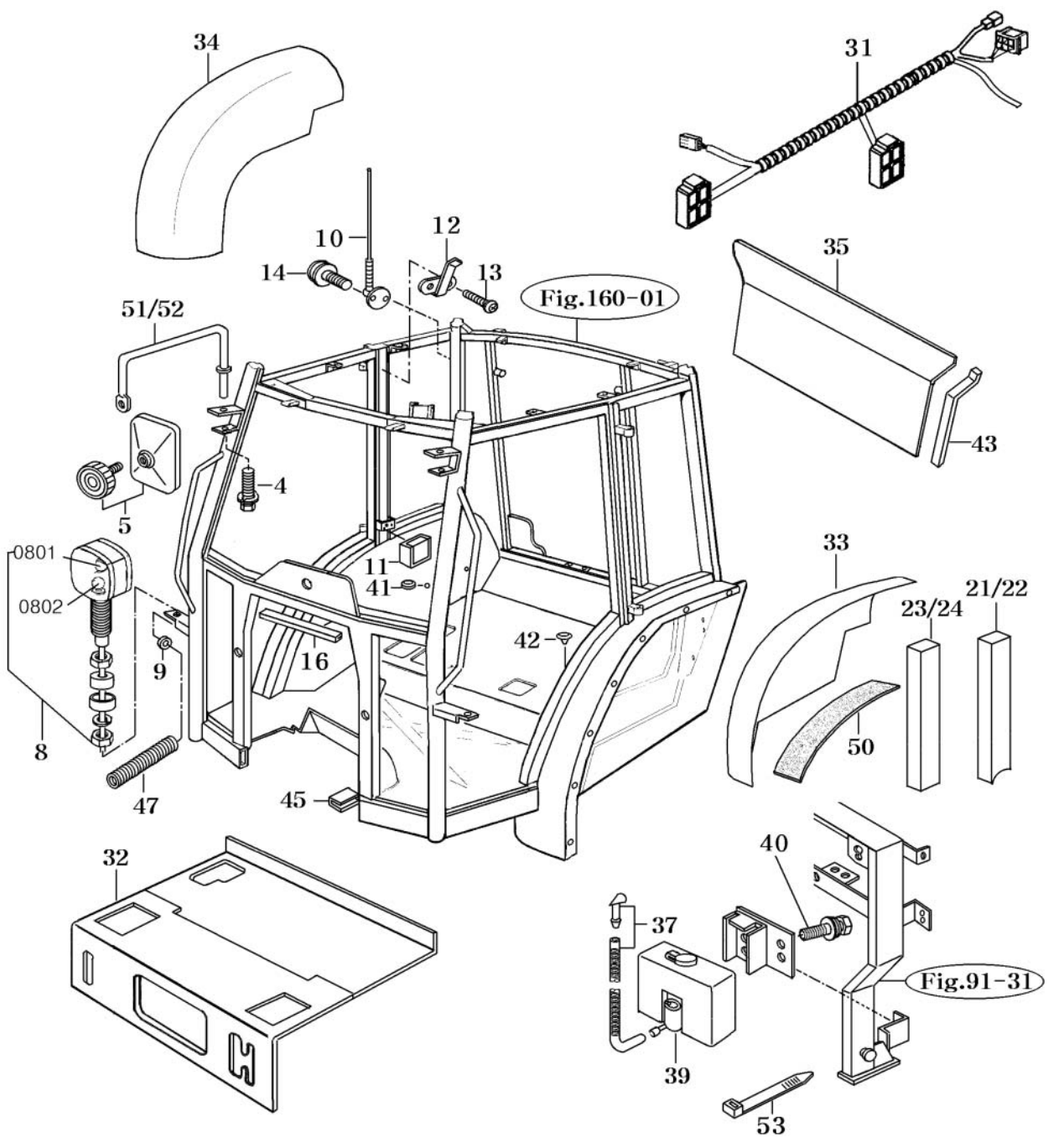

NOTE

FIG 167	INTERIOR PARTS	P1	Month / Year
4510C			06 / 2005

KEY NO.		PART NO.	DESCRIPTION	SPEC.	QTY.	REPAIR	EFFECTIVE DATE	REMARKS
167	004	V2173612030	BOLT , HEX/S	M12X30	2			
167	005	16997028600	MIRROR ASSY		2	C	~2005.06.09	
167	005	17667028600	MIRROR ASSY		2	C	2005.06.10~	
167	008	15666562003	LAMP ASSY , COMBINATION		2	C		
167	00801	15646542130	BULB , 12V 21W		1	B		
167	00802	15666562040	BULB , 12V 5W		1	B		
167	009	14046210300	GROMMET		4			
167	010	17977026700	ANTENNA ASSY		1			
167	011	14517026800	ASHTRAY ASSY		1			
167	012	16997020630	HANGER		2			
167	013	V1122604012	SCREW , C/R FLAT	M4X12	4			
167	014	V1122605016	SCREW , C/R FLAT	M5X16	3			
167	016	16421040010	INSULATOR		3			
167	021	16997028102	WALL BOARD , LH SIDE FRAME		1			
167	022	16997027202	WALL BOARD , RH RR FRAME		1			
167	023	16997027302	WALL BOARD , LH SIDE FRAME		1			
167	024	16997027402	WALL BOARD , RH SIDE FRAME		1			
167	031	16997027602	HARNESS ASSY , CAB FRAME		1			
167	032	16747010661	SEAT FLOOR PANEL		1			
167	033	16997010672	SEAT , LH FENDER		1			
167	034	16997010682	SEAT , RH FENDER		1			
167	035	16997010693	SEAT , RR COVER		1			
167	037	16997027700	NOZZLE SET		1			
167	039	12937033100	TANK ASSY , WASHER		1			
167	040	V2173608020	BOLT , HEX/S	M6X20	2			
167	041	16606070031	CAP , 9		8			
167	042	16606510210	CAP , RUBBER 30		2			
167	043	16607441030	INSULATOR , CAB FENDER		2			
167	045	16997021960	INSULATOR , 32		2			
167	047	16997021881	TUBE , CORRUGATE 110		2			
167	050	16997011770	TAPE		13			
167	051	16997027801DG	STAY COMP , LH MIRRO		1			
167	052	16997027901DG	STAY COMP , RH MIRRO		1			
167	053	16998201780	STRIP, CABLE		4		~2005.02.15	
167	053	14216210380	BAND , WIRE		4		2005.02.16~	

NOTE

FIG 168	HEATER & AIR-CON	P1	Month/Year
4510C			06 / 2005

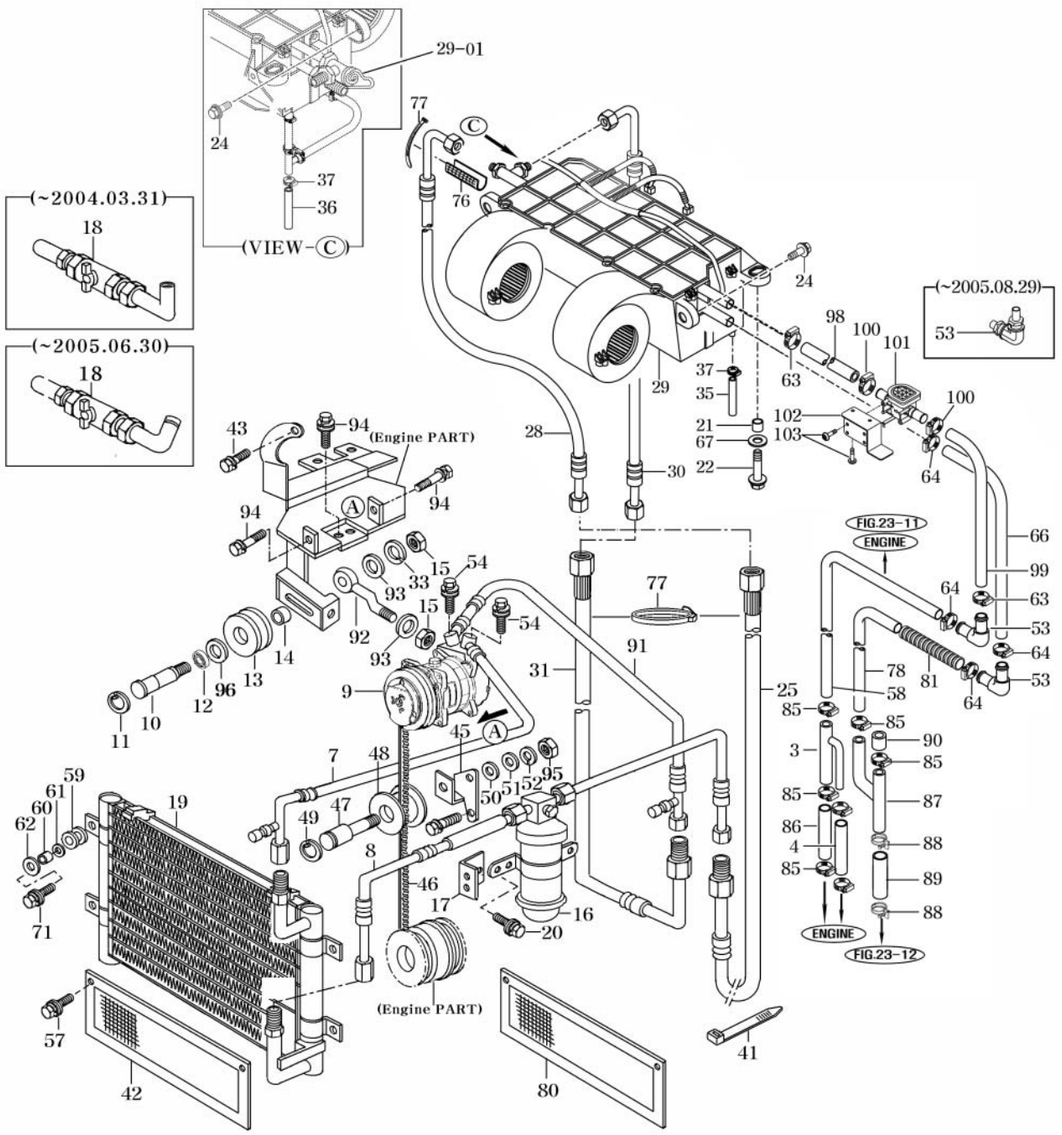

NOTE

FIG 168		P1	Month / Year
4510C			06 / 2005

KEY NO.		PART NO.	DESCRIPTION	SPEC.	QTY.	REPAIR	EFFECTIVE DATE	REMARKS
168	003	14628200120	PIPE COMP, IN		1			
168	004	14628200140	HOSE , HEATER		1	C		
168	007	16008302900	HOSE ASSY , DISCHARGE		1	C		
168	008	16998303700	PIPE ASSY		1	C		
168	009	14628303200	COMPRESSOR ASSY		1	B		
168	010	14627300530	SHAFT , MID PULLEY		1			
168	011	V7051400350	C-RING , HOLE	35	1			
168	012	V6001506202	BEARING , BALL	6202DD	1			
168	013	14622100530DG	PULLEY , MID		1			
168	014	14622100540	COLLAR , SPACER		1			
168	015	V3343600100	NUT , HEX FINE/2	M10	3			
168	016	16608303501	DRYER ASSY		1	B		
168	017	16998303600	BRACKET ASSY		1			
168	018	16998202101	VALVE ASSY , HEATER		1		~2004.03.31	
168	018	16998202102	VALVE ASSY , HEATER		1		~2005.06.30	
168	019	16798303700	CONDENSER ASSY		1			
168	020	V2183608020	BOLT , HEX/SP	M8X20	2			
168	021	16998201110	COLLAR , 8.5X16X25		2			
168	022	V2173608060	BOLT , HEX/S	M8X60	2			
168	024	V2183608040	BOLT , HEX/SP	M8X40	2			
168	025	16008302701	HOSE ASSY		1	C		
168	028	16998302701	HOSE ASSY		1	C	~2004.06.29	
168	028	16998302702	HOSE ASSY		1	C	2004.06.30~	
168	029	16998302805	EVAPORATOR ASSY		1			
168	02901	16998303000	EXPANSION VALVE ASSY		1		2004.02.27~	
168	030	16998302901	HOSE , SUCTION		1	C		
168	031	16008303101	HOSE . SUCTION		1	C		
168	033	V4011600100	WASHER , SPRING	M10	1			
168	035	16998300090	HOSE , RH DRAIN		1			
168	036	16998300060	HOSE , DRAIN		1			
168	037	37481850030	BAND , HOSE 18.5		2			
168	041	16998201780	STRIP, CABLE		4		~2005.02.15	
168	041	14216210380	BAND , WIRE		4		2005.02.16~	
168	042	14216210380	NET COMP , CONDENSER		1			
168	043	14627300140DG	BOLT , HEX/S	M8X20	1			
168	045	14627300140DG	BRACKET , TENSION		1			
168	046	14625807930	V BELT , CONDITIONER REC A55 AIR		1	A		
168	047	14625807230	SHAFT , TENSION PULLEY		1			
168	048	14621201310	PULLEY , HIGH SPEED TENSION		1			
168	049	V7041400150	C-RING , SHAFT	15	1			
168	050	V4111600140	WASHER , PLAIN	M14	1			
168	051	V4111600100	WASHER , PLAIN	M10	1			
168	052	V4011600100	WASHER , SPRING	M10	1			
168	053	16998200030	ELBOW , 90		1		~2005.03.04	
168	053	16998200030	ELBOW , 90		2		~2005.08.29	
168	053	17688200050	ELBOW , 90		2		2005.08..30~	
168	054	V2183608055	BOLT , HEX/SP	M8X55	2			
168	057	V2123606012	BOLT , HEX /SP	M6X12	4			

NOTE

FIG 168 4510C	HEATER & AIR-CON	P1	Month/Year 06 / 2005

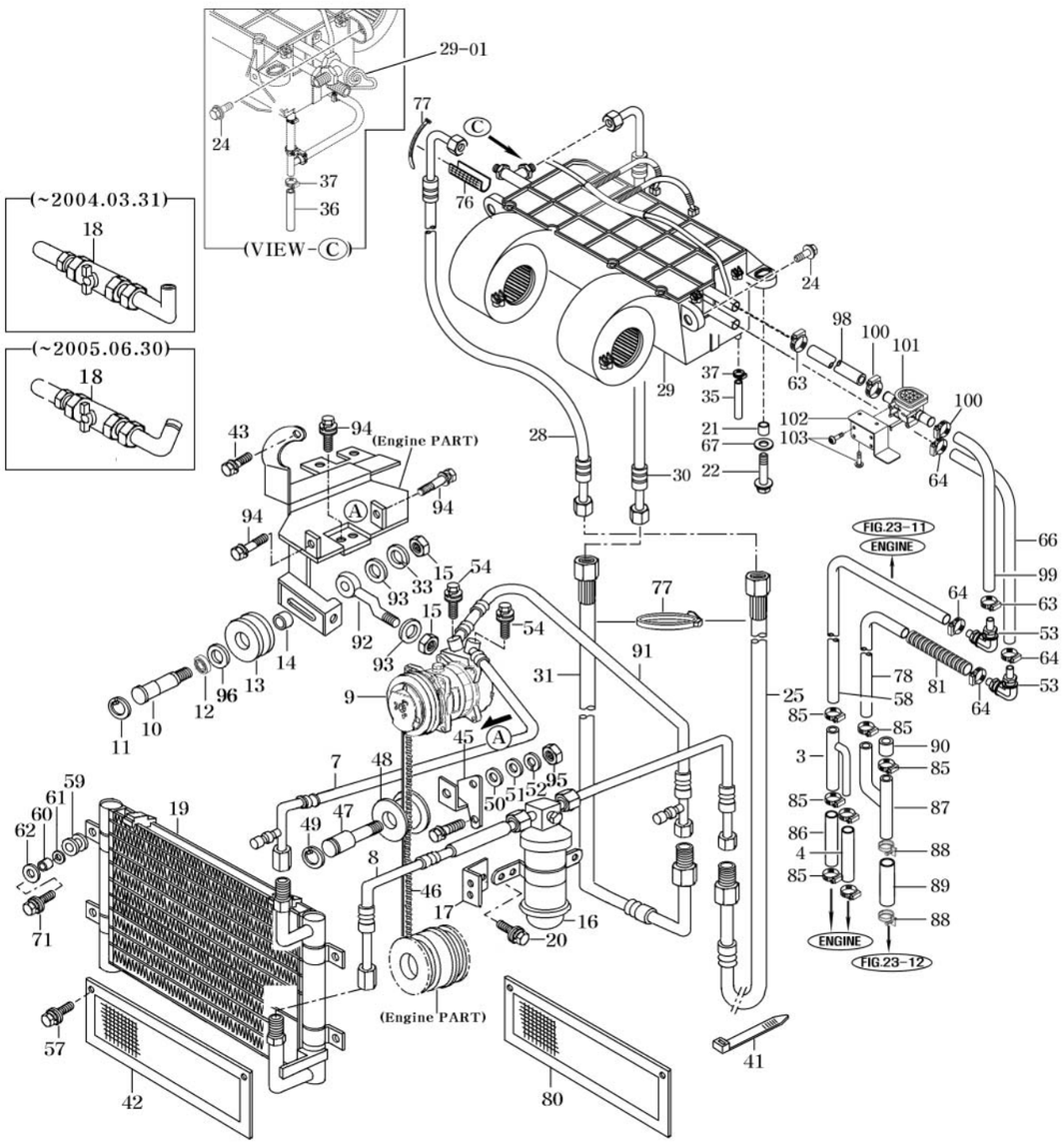

NOTE	

FIG 168 4510C		P2	Month / Year 06 / 2005

KEY NO.		PART NO.	DESCRIPTION	SPEC.	QTY.	REPAIR	EFFECTIVE DATE	REMARKS
168	058	16008200041	HOSE . HEATER		1	C	~2005.03.04	
168	058	16008200042	HOSE . HEATER		1	C	2005.03.05~	
168	059	14046210300	GROMMET		4			
168	060	15991040050	COLLAR , 08X12X08		4			
168	061	35652030040	COLLAR , PACKER SHAFT		4			
168	062	35602010150	WASHER , BIND SHAFT		4			
168	063	16601850160	BAND , 20		2			
168	064	16601850160	BAND , 20		6			
168	066	16998200021	HOSE , HEATER		2	C		
168	067	35602010150	WASHER , BIND SHAFT		8			
168	071	V2183608025	BOLT , HEX/SP	M8X25	4			
168	076	16998201771	INSULATOR , SUCTION		1			
168	077	13424020060	BAND , 250		2		~2005.03.04	
168	077	13424020060	BAND , 250		3		2005.03.05~	
168	078	16998201880	TUBE , STRAIGHT 250		1			
168	080	16608306101DG	NET COMP		1			
168	081	16008200071	HOSE . HEATER		1	C		
168	085	37681850160	BAND , CLAMP(22)		6			
168	086	14628200150	HOSE , HEATER		1			
168	087	14628202600	PIPE COMP		1			
168	088	14241010050	CLIP , 42		2			
168	089	16001040110	HOSE , RADIATOR		1	C		
168	090	14621040120	HOSE , RADIATOR		1	C		
168	091	14628302800	PIPE , SUCTION NO 1		1			
168	092	14627300120	BOLT , TENSION		1			
168	093	V4111600100	WASHER , PLAIN	M10	1			
168	094	V2173608025	BOLT , HEX/S	M8X25	6			
168	095	V3343600100	NUT , HEX FINE/2	M10	1			
168	096	V4111600140	WASHER , PLAIN	M14	1			
168	098	16998200110	HOSE , HEATER OUT		1		2005.03.05~	
168	099	16998200120	HOSE , HEATER IN		1		2005.03.05~	
168	100	37681850160	BAND , 22		2		2005.03.05~	
168	101	17688202100	VALVE ASSY , WATER		1		2005.03.05~	
168	102	17688202200	PLATE COMP		1		2005.03.05~	
168	103	V1902604008	SCREW , TAPPING C/R PAN		4		2005.03.05~	

NOTE	

ENGINE

4A220-DY(Tier 2)

KEY NO.		PART NO.
180	010	01023-50618
040	030	01023-50620
150	014	01023-50620
160	015	01023-50620
170	015	01023-50628
010	020	01023-50650
140	016	01123-50814
030	016	01123-50816
100	009	01123-50818
140	037	01123-50818
220	012	01123-50820
140	025	01123-50822
190	003	01123-50822
220	004	01123-50822
040	011	01123-50825
180	009	01123-50828
170	014	01123-50832
200	010	01123-50832
190	014	01123-50835
040	017	01123-50860
040	018	01123-50870
190	005	01123-50870
040	019	01123-50875
040	020	01123-50880
040	021	01123-50885
160	017	01125-50816
120	012	01133-51030
120	007	01133-51235
200	002	01153-50804
040	031	01513-50616
140	028	01513-50618
030	011	01513-50822
140	017	01513-50822
190	004	01513-50822
220	005	01513-50822
120	013	01517-51028
150	015	01518-50622
180	011	01518-50822
020	008	01654-50820
050	006	01654-50830
020	003	01674-51032
120	006	01674-51032
200	014	01754-50612
200	012	01754-50622
040	022	01754-50801
100	017	01754-50820
200	020	02054-50050
040	032	02056-50060
140	032	02056-50060
150	016	02056-50060

KEY NO.		PART NO.
150	019	02056-50060
180	016	02056-50060
150	010	02112-50080
120	010	02114-50080
200	007	02114-50080
030	014	02156-50080
140	024	02156-50080
180	012	02156-50080
190	006	02156-50080
120	014	02176-50100
220	008	02751-50080
090	008	03024-50510
130	010	03024-50520
040	024	04011-50180
200	018	04012-50050
160	020	04012-50060
170	017	04012-50060
170	016	04012-50080
150	009	04013-50080
200	005	04013-50080
200	009	04015-50080
200	019	04512-50050
040	033	04512-50060
140	031	04512-50060
150	017	04512-50060
170	011	04512-50060
180	015	04512-50060
030	013	04512-50080
120	011	04512-50080
140	023	04512-50080
180	013	04512-50080
190	007	04512-50080
200	006	04512-50080
120	015	04512-50100
080	013	04612-00190
140	014	04612-00240
020	006	04717-01200
030	010	04724-00100
160	004	04811-00060
150	008	04811-00120
040	004	04811-00150
040	014	04811-00150
020	009	04811-00160
040	005	04811-00200
040	006	04811-00360
110	024	04811-10300
090	004	04811-50300
010	009	05012-00408
050	013	05012-00408
010	010	05012-00609

KEY NO.		PART NO.
010	011	05012-00612
040	008	05012-00612
010	012	05012-01018
160	012	05411-00420
160	021	05525-50600
150	007	05712-00408
010	022	05712-00410
140	005	05712-00525
100	007	05712-00720
110	021	05712-00720
200	015	05712-00720
030	009	06311-55010
010	005	06311-75018
010	006	06311-75045
100	005	06350-00607
110	016	07715-00401
140	008	07715-00403
140	010	07715-03205
040	027	07715-03213
150	020	07811-11210
150	021	07918-00001
140	004	08153-06205
140	003	08240-00001
090	012	09318-88180
130	014	09661-40300
140	034	14911-4275-1
130	015	14971-4275-1
120	019	15001106804
080	015	15021-1424-1
010	016	15021-3366-1
170	004	15021-5616-4
170	010	15021-5624-3
150	018	15108-5728-4
190	010	15109-7336-4
130	008	15121-5385-2
030	012	15221-0175-1
030	003	15221-0337-3
010	007	15221-0338-3
010	008	15221-0339-2
030	004	15221-0349-3
080	003	15221-1324-2
140	015	15221-1632-1
110	028	15221-2336-1
010	015	15221-3361-1
010	013	15221-3365-1
020	005	15221-3375-2
160	008	15221-5166-1
140	013	15221-5547-1
140	011	15221-5569-2
140	012	15221-5574-1

KEY NO.		PART NO.
170	008	15221-5615-1
170	012	15221-5623-5
040	007	15221-5628-2
120	003	15221-6382-4
170	013	15221-6641-1
180	014	15221-8821-1
040	025	15241-3695-2
140	029	15241-5214-1
050	012	15291-0456-2
190	015	15301-3283-0
190	012	15321-7327-1
140	030	15381-5203-0
140	020	15401-5211-2
110	023	15471-2331-1
140	033	15471-4211-1
140	019	15471-5211-1
160	010	15471-5798-1
160	019	15471-6016-2
160	003	15471-9201-1
240	002	15471-9536-1
240	003	15475-6024-2
100	006	15521-1651-1
110	019	15521-2353-1
040	023	15521-3229-1
160	002	15521-5426-1
160	005	15521-5427-1
190	002	15521-7292-1
040	028	15521-7332-1
040	029	15521-7333-1
190	009	15521-7334-1
200	013	15521-7411-1
050	011	15521-9402-1
150	001	15601-5412-1
170	007	15601-5443-1
170	001	15601-5602-1
120	018	16733412040
150	011	17011-5738-3
110	020	19202-2354-1
010	021	19202-3566-1
140	027	84612-6050-0
240	004	C5510-43101
050	007	E5500-04464
110	026	E5500-11302
080	004	E5500-13332
080	005	E5500-13362
080	016	E5500-14232
100	001	E5500-15553
100	008	E5500-16272
110	012	E5500-22142
110	027	E5500-23382

KEY NO.		PART NO.
120	004	E5500-25164
090	005	E5500-33142
010	019	E5500-35152
040	026	E5500-36932
010	024	E5500-39013
140	026	E5500-42412
120	008	E5500-63015
190	013	E5500-73263
010	014	E5500-73342
190	008	E5500-73342
190	016	E5500-74213
150	006	E5610-57151
040	002	E5612-04112
200	004	E5620-64101
160	016	E5753-60015
040	016	E5800-04133
220	010	E5800-12371
240	001	E5800-12371
040	010	E5800-32621
040	012	E5800-32882
040	013	E5800-32912
040	035	E5800-33143
150	012	E5800-57111
150	013	E5800-57211
160	013	E5800-60111
200	003	E5800-64102
200	008	E5800-64422
240	005	E5800-72316
200	017	E5800-72531
190	011	E5800-73011
180	001	E5800-73036
180	005	E5800-73052
180	002	E5800-73415
180	008	E5800-73431
180	004	E5800-73513
180	006	E5800-73521
180	003	E5800-73551
200	011	E5800-74154
180	007	E5800-74252
040	003	E5800-96031
040	015	E5800-96831
110	014	E5800-A0091
010	003	E5900-96021
030	005	E5900-96021
010	004	E5900-96031
020	002	E6200-01623
120	009	E6200-04622
090	009	E6200-14523
140	036	E6200-16213
110	017	E6200-23472

KEY NO.		PART NO.
110	018	E6200-23482
110	022	E6200-24112
020	007	E6200-32112
010	018	E6200-35012
160	009	E6200-51654
170	005	E6200-54172
160	001	E6200-54252
160	011	E6200-57731
160	007	E6200-57922
020	004	E6200-91092
020	001	E6200-A0071
040	034	E6201-32443
180	017	E6201-50619
030	018	E6300-03453
050	003	E6300-04362
050	002	E6300-04542
050	004	E6300-04812
050	005	E6300-04821
040	036	E6300-11912
220	009	E6300-11912
100	002	E6300-15113
110	006	E6300-21162
110	003	E6300-21313
110	008	E6300-21332
110	011	E6300-21353
110	009	E6300-22015
110	010	E6300-22113
110	013	E6300-22312
100	010	E6300-24012
100	011	E6300-24212
100	016	E6300-24251
100	012	E6300-24281
100	015	E6300-24321
100	013	E6300-24361
100	014	E6300-24371
010	023	E6300-35681
010	025	E6300-35692
140	007	E6300-51152
140	018	E6300-52111
130	001	E6300-53004
130	003	E6300-53621
130	002	E6300-53651
170	006	E6300-54231
140	009	E6300-55452
170	002	E6300-56053
170	003	E6300-56122
170	009	E6300-56131
170	019	E6300-56414
170	018	E6300-56481
160	006	E6300-57743

KEY NO.		PART NO.
140	006	E6300-A0011
050	001	E6300-A0033
050	008	E6300-A0043
050	009	E6300-A0053
050	010	E6300-A0063
010	002	E6301-01116
030	001	E6301-03052
030	002	E6301-03122
030	008	E6301-03148
030	017	E6301-03313
220	002	E6301-11764
220	001	E6301-11822
080	001	E6301-13111
080	002	E6301-13121
080	006	E6301-13151
030	007	E6301-13561
030	006	E6301-13581
080	007	E6301-14001
080	014	E6301-14111
080	008	E6301-14261
080	012	E6301-14311
080	009	E6301-14331
080	010	E6301-14351
080	011	E6301-14431
140	001	E6301-16029
100	004	E6301-16156
140	002	E6301-16177
110	001	E6301-21016
110	004	E6301-21053
110	002	E6301-21114
110	005	E6301-21152
110	007	E6301-21202
010	017	E6301-33812
130	013	E6301-42501
140	022	E6301-51012
140	021	E6301-52111
130	004	E6301-53713
130	005	E6301-53723
130	006	E6301-53733
130	007	E6301-53743
130	011	E6301-65512
010	001	E6301-A0015
100	003	E6301-A0034
030	015	E6305-01751
110	015	E6305-23113
020	010	E6305-36411
150	004	E6305-54221
150	005	E6305-54421
130	012	E6305-65562
150	002	E6305-82021

KEY NO.		PART NO.
150	003	E6305-96652
120	005	E6306-04612
220	007	E6306-12311
220	011	E6306-12511
160	014	E6306-57481
200	001	E6306-64012
190	001	E6306-72911
200	016	E6306-74282
040	001	E6306-A0016
170	020	E6313-56421
040	009	E6500-32612
090	011	E6510-05511
090	003	E6510-05551
220	003	E6510-05551
090	001	E6510-14502
090	002	E6510-14512
090	007	E6510-14532
090	006	E6510-14671
110	025	E6510-23251
090	010	E6510-33661
080	017	E6510-91501
220	006	E6520-12351
120	001	E6536-25013
120	002	E6536-25112
160	018	T4240-32642
140	035	T4240-36332
130	009	T4815-67371
120	017	V5201008020
120	016	V5201010020

KEY NO.		PART NO.

CHASSIS

04.2006

KEY NO.		PART NO.
146	010	12009100010
146	035	12009100020
146	013	12009100030
146	050	12009100040
146	074	12009100050
146	049	12009100060
146	071	12009100080
146	051	12009100110
146	014	12009100120
146	015	12009100130
146	016	12009100140
146	017	12009100150
146	018	12009100160
146	021	12009100190
146	022	12009100210
146	026	12009100230
146	073	12009100240
146	012	12009200040
052	026	12102750200
052	019	12102752301
053	006	12102850200
146	095	12109040060
146	080	12109040250
146	053	12205300040
146	089	12209010100
146	079	12209040020
146	044	12209040030
146	078	12209040070
146	093	12209040150
146	083	12209040780
146	088	12209041221
146	060	12209041960
146	052	12209100070
059	001	12304012001
059	001	12304012002
059	002	12304012021
059	002	12304012030
082A	036	12305150010
082A	037	12305152000
082A	03701	12305152010M
082A	03702	12305152100
124	023	12305152100
082A	020	12305152300
082A	081	12305152501
082A	080	12305152601
082A	004	12305180010
069	020	12305180020
082A	049	12305180020
077	002	12405120034DG
081	023	12405152200DG

KEY NO.		PART NO.
081	009	12405152500DG
101	043	12406602010
102	008	12406642101
085	096	12505240060
086	008	12505240060
086	020	12505240060
086	003	12505243000DG
086	007	12505243500
086	019	12505243500
086	010	12505245300DG
086	011	12505245310
086	012	12505245320
086	013	12505245330
086	014	12505245340
086	015	12505245350
031	010	12507060020
146	004	12509010031
146	094	12609040620
146	082	12609040660
146	081	12609040680
085	001	12705202000DG
063	012	12754101000DG
084	021	12755222000DG
146	087	12759040050
051	024	12902700020
051	030	12902750090
146	028	12909040030
106	001	12936682202
167	039	12937033100
038	011	13022250030
037	006	13022250030
045	006	13022250030
050	002	13022250030
052	006	13022250030
039	024	13267060022
081	025	13267060022
083	015	13267060022
083	035	13267060022
095	049	13307028200
025	005	13424020060
027	007	13424020060
105	012	13424020060
106	033	13424020060
106	034	13424020060
168	077	13424020060
168	077	13424020060
085	055	13602470010DG
085	056	13602470020DG
085	068	13605200011DG
027	035	13651210050

KEY NO.		PART NO.
038	016	13667012020
022	031	13764020030
026	014	13764020030
105	013	13764020030
106	030	13764020030
124	002	14019060050
027	018	14041170080
057	012	14041200080
059	034	14041200080
056	018	14043120060
023	036	14046210300
025	051	14046210300
090	018	14046210300
167	009	14046210300
168	059	14046210300
065	025	14051060030
027	015	14141170050
025	044	14151020120
025	045	14151020130
029	022	14151200040
038	007	14151210090
064	046	14152050160
055	014	14153070020
022	010	14161010110
102	019	14166210440
023	025	14171020050
056	015	14171020050
085	005	14215020020
085	047	14215020020
124	017	14215020020
095	022	14216020051
167	053	14216210380
168	041	14216210380
168	042	14216210380
124	001	14219060010
124	010	14219060031
022	008	14221012381
023	011	14241010040
023	015	14241010040
023	020	14241010050
082	052	14241010050
168	088	14241010050
064	003	14251320150
064	045	14254310080
043	005	14254330180
106	007	14256210040
164	024	14256210040
025	041	14261602070
025	046	14261602090
064	026	14273010050

KEY NO.		PART NO.
043	008	14273170040
038	019	14276010030
054	010	14313010050
054	008	14313010060
054	006	14313010090
022	016	14321018620
029	023	14321200040
057	024	14321200040
029	005	14321202140
029	008	14321202171
030	008	14322420010
030	028	14322420010
038	023	14322420010
057	009	14322420010
057	040	14322420010
128	001	14322420040
095	023	14326160020
102	026	14326210061
094	005	14326210110
027	037	14326510210
095	025	14326510210
166	027	14326510210
095	007	14346110021
095	042	14346110021
022	017	14401010140
022	009	14421012390
106	021	14441010161
037	028	14442180090
050	026	14443120050
033	006	14443140041
043	006	14443140091
056	012	14443270030
056	002	14443272030
083	032	14444080062
065	022	14444120090
081	041	14445100080
084	028	14445140051
085	045	14445140051
091	017	14446010150
101	029	14446213110
124	025	14446213201
036	024	14462162180
105	006	14466220030
025	007	14481112300
022	012	14501030010
025	018	14501410050
025	028	14501410050
025	035	14501410050
026	003	14501410050
065	006	14501410050

KEY NO.		PART NO.
069	013	14501410050
124	022	14501673990
124	022	14501673991
031	001	14502010013M
037	031	14502810074
023	019	14504313301DG
039	011	14505152380
022	027	14511033000
024	025	14511130010DG
051	031	14512730010
101	005	14516582100
101	002	14516602000
106	016	14516682000
106	016	14516682001
095	051	14517015900DG
167	011	14517026800
160	031	14517030030
146	002	14519010040
146	003	14519010050
164	027	14519020980DG
146	031	14519040020
124	016	14519400010
061	001	14553403611M
061	016	14553910010
124	024	14585142410
027	041	14601160011
027	042	14601162200
027	040	14601162230
027	022	14601162300
023	001	14611042102
025	050	14611113000DG
025	027	14611113100
027	039	14611162000DG
027	038	14611162100DG
062	023	14614072501
062	024	14614072600
061	017	14614075002
090	022	14616022000DG
168	090	14621040120
026	018	14621112700DG
025	004	14621113202
168	048	14621201310
168	013	14622100530DG
168	014	14622100540
168	047	14625807230
168	046	14625807930
168	092	14627300120
168	043	14627300140DG
168	045	14627300140DG
168	010	14627300530

KEY NO.		PART NO.
168	003	14628200120
168	004	14628200140
168	086	14628200150
168	087	14628202600
168	091	14628302800
168	009	14628303200
063	032	14734070100DG
065	001	14734320011M
081	041	14801020070
082	035	14801020070
082A	035	14801020070
082	059	14869352050
054	001	14883010011
054	011	14883010051
054	012	14883010060M
054	014	14883010080
054	015	14883010090
054	015	14883010090
055	019	14883020022M
056	007	14883100020
056	011	14883102200
064	008	14884100031DG
064	051	14884110090
085	041	14885142300
102	022	14916232220
102	024	14916232220
102	023	14916232230
024	035	15001030010
124	022	15001673990
045	023	15002810104
061	002	15003701000
082	047	15004070010
082A	047	15004070010
039	030	15004072501
062	005	15004072602
039	034	15004073200
062	004	15004073501
082	048	15005152380
082	055	15005153000DG
082	058	15005153010
124	023	15005153010
039	033	15006210111
039	032	15006252201
082A	048	15006252220
039	000	15006253102DG
082	056	15015082412
082	057	15015082422
064	047	15024320020
054	002	15033010010
085	062	15062470050

KEY NO.		PART NO.
023	023	15081020070
025	040	15131023270
025	043	15131023290
025	048	15131023320
054	032	15133060030
056	005	15133102020
031	021	15134080020
056	006	15143100010M
059	033	15184060060
059	028	15184060080DG
065	002	15184072401
069	016	15184322500
093	035	15186070020
102	025	15186213200
099	001	15186214401
095	026	15187221070
160	020	15187455520
146	090	15189030060
146	091	15189030070
085	060	15189240010
022	029	15191010040
093	037	15196040050
099	003	15221120010DG
099	003	15221120011DG
057	032	15231013102
023	022	15231040150
101	007	15236582300
106	014	15236682031
022	011	15241022521
030	003	15241220010
057	005	15241220010
044	007	15242360050
044	020	15242360050
051	017	15242360050
026	015	15251020040
085	058	15252470010
067	041	15264362200
067	044	15264363200
082	051	15265150020
082	036	15265152002DG
082	020	15265152301
095	043	15276040020
027	021	15441170051
038	020	15441170051
030	016	15441230050
101	036	15446230010
101	037	15446232320
101	038	15446232330
101	039	15446232340
101	040	15446232350

KEY NO.		PART NO.
022	005	15541000000
022	002	15541012221
022	006	15541012230
026	002	15585060110
023	016	15601040104
027	004	15601160083
027	027	15601160083
027	032	15601162305DG
027	014	15601162506DG
030	020	15601300010
030	015	15601320011
057	013	15601320011
030	012	15601320073
056	023	15601320073
032	016	15602060023
032	016	15602060024
033	012	15602080093
033	019	15602080093
033	025	15602080093
033	015	15602080224
034	012	15602160083
036	025	15602200040
037	021	15602230018M
037	022	15602230026M
037	013	15602230074
037	018	15602230085
037	025	15602230085
045	018	15602230085
037	011	15602230124
037	010	15602231600
052	003	15602231600
052	014	15602231600
053	003	15602231610
038	01302	15602232002
038	001	15602250015M
038	006	15602250025
038	013	15602252200
038	01301	15602252300
044	017	15602430134
044	023	15602430134
044	018	15602430154
044	024	15602430154
044	019	15602430173
045	010	15602590014M
045	008	15602590124
050	001	15602650021M
050	007	15602652202
045	021	15602800044
050	012	15602870023
037	027	15602900063

KEY NO.		PART NO.
045	019	15602900063
056	014	15603100035
056	016	15603100045
057	026	15603102105
057	021	15603140010
057	008	15603142503DG
057	016	15603142910
077	033	15603160025
055	024	15603162100DG
058	004	15603200010
059	007	15604010025
059	009	15604010060
059	027	15604040010DG
059	025	15604042101DG
071	021	15605070070
077	001	15605110054
082	004	15605150015
082A	074	15605150031
086	004	15605260014
086	016	15605260014
100	003	15606010154
090	033	15606030030
090	047	15606040227
093	022	15606082203
093	031	15606092013
093	034	15606092103
095	050	15606112600
095	004	15606300030
083	012	15606300310
101	006	15606582204
108	008	15606642103
165	016	15606642103
102	016	15606642400
105	007	15606642400
102	016	15606642401
105	007	15606642401
102	001	15606642500
102	002	15606642520
102	003	15606642530
106	031	15606660040
106	028	15606662120
146	024	15609030046
157	005	15609511000DG
037	015	15612230026M
083	033	15615180013
083	013	15615182016M
083	016	15615182301
093	032	15616092003DG
101	048	15616603100
101	009	15616604111

KEY NO.		PART NO.
105	010	15616743300
146	027	15619030040
071	017	15640040000
083	036	15640090001
022	028	15641030022
023	033	15641040160
023	012	15641040180
026	013	15641113601
026	007	15641113702DG
027	030	15641160013
030	002	15641320020
033	001	15642080015
033	020	15642080022
033	016	15642080062
033	003	15642080080
033	013	15642080090
032	023	15642120031
034	001	15642140011
034	002	15642140023
034	010	15642160022
034	016	15642160032
033	008	15642160041
034	018	15642160041
034	007	15642170012
036	009	15642200032
036	010	15642210012
036	011	15642210024
036	002	15642210050
036	007	15642210060
036	016	15642212003
036	019	15642212030
036	021	15642212040
036	018	15642212050
036	022	15642212060
036	023	15642212070
036	017	15642212080
036	026	15642212090
037	008	15642230033M
037	009	15642230043M
037	001	15642230050
037	002	15642230060
038	010	15642260013M
039	001	15642300017M
043	001	15642400019M
044	001	15642430013
044	003	15642430021
044	004	15642430032
044	005	15642430042
044	009	15642430053
044	011	15642430062

KEY NO.		PART NO.
044	014	15642430073
044	021	15642430082
044	006	15642430110
044	025	15642500012
045	001	15642590013
045	003	15642590024M
045	005	15642590034M
047	001	15642610040
051	001	15642730015
051	015	15642730052
051	012	15642730072
052	001	15642750014
052	005	15642750033M
052	013	15642752103
053	008	15642850024DG
050	015	15642872002DG
054	020	15643010012
054	022	15643010021
054	023	15643010031
054	025	15643010043M
054	027	15643010052
054	028	15643010062
054	028	15643010062
054	013	15643030013M
054	018	15643030022
054	007	15643030040
055	020	15643032001
055	001	15643040015M
055	002	15643040025M
055	012	15643070032
055	013	15643072001
057	025	15643102104
057	029	15643102202DG
057	030	15643102303DG
056	001	15643102602
056	004	15643102611
057	003	15643142402
055	026	15643160020
064	005	15644312003DG
027	046	15645120010
162	031	15645120010
077	003	15645120032DG
083	034	15645152904
081	006	15645153000
085	044	15645220011
084	027	15645220020
085	095	15645220020
084	025	15645250010
084	060	15645250010
095	021	15646300083

KEY NO.		PART NO.
095	005	15646300120
099	007	15646502001
164	017	15646542130
167	00801	15646542130
101	008	15646584121
102	008	15646642106
030	01901	15651302105
053	002	15652852105DG
056	024	15653102104
055	023	15653162006
033	009	15662090013
033	022	15662090022
033	030	15662090032
032	018	15662130012
032	024	15662130021
032	025	15662130031
047	010	15662620050
051	006	15662730032
038	017	15662832004
037	034	15662912104DG
057	001	15663142402
167	008	15666562003
167	00802	15666562040
164	018	15666562110
102	021	15666642000
026	006	15681110032
030	024	15681322000
030	026	15681322102
033	014	15682090020
033	026	15682090020
054	024	15683020010
084	098	15685100020DG
082	002	15685152603
082A	002	15685152603
085	022	15685252204
085	023	15685252801
106	037	15686682121
108	005	15686722101
102	013	15756230100
102	014	15756230110
106	019	15816212900
108	011	15816212900
165	017	15816212900
160	005	15817401120DG
160	006	15817401130
161	013	15817401130
162	016	15817401130
160	007	15817401140DG
160	016	15817421020
161	014	15817421020

KEY NO.		PART NO.
162	017	15817421020DG
036	015	15933070521
094	006	15966250010
094	016	15966250010
094	011	15966250020DG
094	022	15966250020DG
094	010	15966250030DG
034	021	15972180010
036	012	15972180010
069	017	15975010011M
023	037	15991040050
025	052	15991040050
168	060	15991040050
034	019	15992180010
022	001	16001032000
022	003	16001032100
022	020	16001032200DG
022	020	16001032201DG
022	004	16001032300DG
022	030	16001032500DG
023	010	16001040020
168	089	16001040110
023	031	16001040130
023	004	16001042202
024	011	16001051991DD
025	003	16001112201
026	001	16001113100DG
099	014	16001120041
099	012	16001122002DG
027	003	16001162101
030	014	16001200080
027	001	16001220000DG
024	017	16002010150
045	015	16002810012
038	022	16002842002
037	033	16002912000
090	039	16003300012
090	037	16003302100
062	001	16004072000
063	020	16004102800DG
067	017	16004340040
085	017	16005252000DG
085	018	16005252500DG
091	031	16006011002DG
090	005	16006020680
090	016	16006022000DG
090	023	16006022100
090	042	16006023800DG
090	066	16006024710
090	013	16006052104DG

KEY NO.		PART NO.
092	045	16006103300DG
092	046	16006103410DG
090	001	16006201001BR
092	055	16006202022DG
092	052	16006202031DG
092	053	16006202042DG
092	054	16006202051DG
092	001	16006202102BR
092	056	16006203022DG
092	057	16006203031DG
092	058	16006203042DG
092	059	16006203051DG
092	005	16006203102BR
094	014	16006265400DG
094	015	16006265500DG
090	032	16006301043
095	001	16006303204DG
102	045	16006305100DG
100	001	16006522001
100	002	16006522040
101	003	16006604100
106	057	16006680020
164	010	16007010351
164	011	16007010361
164	020	16007010410
164	021	16007010420
166	001	16007010522
165	028	16007013030
164	025	16007018100DG
164	026	16007019100DG
166	076	16007020500
166	077	16007020600
164	016	16007023300
166	083	16007026100
037	023	16007060020
045	016	16007060020
100	005	16008010080
168	058	16008200041
168	058	16008200042
168	081	16008200071
168	025	16008302701
168	007	16008302900
168	031	16008303101
157	001	16009400011DG
157	012	16009400040
157	010	16009402300
062	022	16024072700
023	034	16071040031
157	010	16204100150
157	001	16209400071DG

KEY NO.		PART NO.
061	015	16303910020
050	009	16322652000
051	028	16322730030
051	029	16322730040
051	021	16322732000
050	019	16322880020
056	025	16323040010
056	026	16323040020
146	064	16329040020
029	021	16341200020M
029	007	16341202130
030	001	16341322000
036	027	16342212050
047	008	16352620010
054	004	16353030011
054	035	16353030020
054	005	16353030050
054	029	16353060010
054	030	16353060020
055	010	16353070012
055	011	16353070021
095	041	16421040010
167	016	16421040010
029	002	16441202020
029	003	16441202030
029	004	16441202040
029	006	16441202050
029	010	16441202101
090	078	16491163701DG
033	028	16492092001
034	014	16492092001
082	066	16495100010
094	002	16496252003DG
094	001	16496252202DG
090	077	16501020070
029	012	16501210010M
029	020	16501210050
032	010	16502070020
032	007	16502070110
032	012	16502070120
086	055	16505240300
124	024	16505240310
085	053	16505245500DG
085	039	16505245510
085	040	16505245520
085	042	16505245530
108	010	16506305200
108	001	16506722100
081	009	16582632602DG
024	006	16601014400

KEY NO.		PART NO.
022	019	16601032100DG
023	002	16601042160
023	003	16601042340
099	020	16601042340
029	017	16601200030
029	018	16601210020M
029	001	16601212002
030	025	16601220000
030	011	16601220020
056	021	16601220020
030	019	16601302000
030	01902	16601302010
023	040	16601850160
168	063	16601850160
168	064	16601850160
038	029	16602250010
045	025	16602250020
037	038	16602250040
039	020	16602332011M
052	009	16602750050
053	010	16602850020
053	010	16602850021
054	000	16603022000
054	019	16603022100
055	015	16603070010
029	013	16604610020
029	019	16604610020
083	017	16605182000
086	004	16605260010
086	016	16605260010
093	016	16606062602DG
093	016	16606062603DG
167	041	16606070031
100	057	16606212210
095	030	16606300030
095	032	16606300050
095	027	16606510210
095	055	16606510210
163	015	16606510210
167	042	16606510210
165	013	16606691000
165	014	16606691080
105	001	16606702100
105	015	16606742301
160	017	16607202100
160	018	16607202200
160	019	16607202300
160	011	16607425821
167	043	16607441030
165	004	16608103100

KEY NO.		PART NO.
168	016	16608303501
168	080	16608306101DG
157	004	16609400020DG
101	027	16626582402
106	054	16626692100
065	018	16704020020
062	011	16704070080
064	031	16704110060
064	066	16704110121
064	020	16704112000
064	021	16704112010
064	022	16704112110
064	048	16704112120
066	045	16704130060
066	014	16704130080
064	023	16704310030
065	014	16704310040
064	027	16704310160
064	025	16704320020
066	031	16704320030
064	028	16704320050
066	023	16704330180
065	015	16704332101
065	016	16704332111M
065	017	16704332220
066	001	16704340010M
066	002	16704340020
066	007	16704340030
066	015	16704340040
067	034	16704340070
067	020	16704340130M
067	030	16704340150
065	007	16704362201
065	008	16704362211M
065	009	16704362221
067	035	16709510080
023	024	16731040130
031	003	16733412032
067	036	16734074000
067	068	16734074101
067	069	16734074201
066	018	16734130080
066	017	16734340050
066	035	16734340060
067	014	16734340080
066	011	16734342000M
066	013	16734342100M
066	025	16734350010
066	026	16734350020
075	006	16735050601

KEY NO.		PART NO.
076	014	16735061400
077	008	16735070080
077	009	16735070090
077	012	16735070120
077	011	16735071100
077	011	16735071101
128	014	16735080010
128	006	16735082100
128	006	16735082101
128	007	16735082200
128	007	16735082201
128	008	16735082300
128	008	16735082301
128	081	16735088100
128	081	16735088101
128	081	16735088102
128	082	16735088201
128	082	16735088202
128	082	16735088203
128	083	16735088801
128	083	16735088802
128	083	16735088803
081	024	16735100010
081	026	16735100020
081	023	16735100070
082	002	16735102200
082A	002	16735102200
128	010	16735122100DG
128	011	16735122200DG
128	002	16735122300DG
084	024	16735222101DG
084	024	16735222102DG
085	096	16735240060
086	008	16735240060
086	020	16735240060
086	003	16735243000DG
086	007	16735243500
086	019	16735243500
086	010	16735245300DG
086	011	16735245311
086	012	16735245321
086	014	16735245341
086	013	16735245351
075	005	16735304100
095	028	16736300010
062	006	16744072800
063	030	16744100050
063	031	16744100060
063	001	16744102201DG
064	001	16744310010

KEY NO.		PART NO.
064	004	16744312000DG
064	014	16744313000
128	018	16745080170
128	018	16745080171
128	018	16745080171
082	008	16745152330
086	055	16745240300
086	001	16745252000DG
085	080	16745254000
085	080	16745255000
086	002	16745256000DG
102	004	16746642300
167	032	16747010661
160	001	16747012101DG
031	018	16751850222
057	014	16753143001
057	019	16753143200DG
057	022	16753143600DG
057	022	16753143601DG
059	035	16754042100DG
059	032	16754042201DG
062	008	16754070010
062	009	16754070020
062	010	16754070030
062	007	16754072700
102	027	16756214701
095	035	16756300010
095	020	16756300072
025	017	16791020020
023	032	16791040050
023	045	16791040060
024	024	16791052432
024	020	16791054101DG
024	003	16791054212DD
024	004	16791054222DD
024	023	16791054312
024	025	16791054392DG
024	002	16791054503
024	040	16791054600DD
024	001	16791132005
024	001	16791132006
024	001	16791132007
027	009	16791162004DG
027	055	16791220010
063	012	16794101000DG
090	045	16796024601DG
092	036	16796043800DG
092	066	16796043900DG
106	024	16796683100
168	019	16798303700

KEY NO.		PART NO.
025	004	16991024100
065	005	16991024200
023	047	16991040020
023	027	16991042103DG
024	005	16991052402
024	021	16991054320
023	017	16991113131
023	017	16991113132
023	026	16991142003DG
027	011	16991160010
090	057	16991600080
031	020	16992011110
050	014	16992190062
053	005	16992190101
165	023	16992604120
166	026	16992604120
050	011	16992872500
059	036	16994011990
059	020	16994043203DG
128	090	16995152360
086	073	16995252601
090	019	16996010010DG
090	020	16996010020DG
090	006	16996010280
091	007	16996013411
091	008	16996013421
090	044	16996013431
092	044	16996013431
091	011	16996013441
091	010	16996013450
092	027	16996013501DG
092	028	16996013601DG
090	051	16996015511
090	056	16996015530DG
090	002	16996020600
090	003	16996020650DG
090	004	16996020662DG
090	043	16996024552
090	067	16996024721
164	009	16996043100
164	015	16996043100
092	034	16996043600
092	035	16996043700
090	075	16996054501DG
093	020	16996082301
093	023	16996082404DG
093	023	16996082404DG
090	028	16996130024
090	028	16996130025
091	035	16996204171

KEY NO.		PART NO.
091	013	16996204200DG
091	014	16996204301
091	015	16996204401
090	055	16996204570
100	055	16996212200
095	002	16996300200
095	003	16996300210
099	002	16996503000
099	002	16996503001
166	017	16996549160
160	002	16997010012
160	003	16997010021
161	004	16997010061
163	013	16997010061
161	011	16997010081
161	012	16997010091
162	001	16997010151
162	002	16997010161
162	003	16997010172
162	005	16997010180
162	006	16997010190DG
162	007	16997010210
162	011	16997010220
162	012	16997010230
162	013	16997010240
162	019	16997010251
163	001	16997010260
163	002	16997010271
163	003	16997010282
162	032	16997010290
163	010	16997010310
163	011	16997010322
163	012	16997010331
164	008	16997010340
165	001	16997010515
165	001	16997010516
166	002	16997010531
166	003	16997010541
166	012	16997010550
166	013	16997010560DG
166	021	16997010582
095	013	16997010640
095	019	16997010654
167	033	16997010672
167	034	16997010682
167	035	16997010693
166	081	16997010720
166	082	16997010730
095	036	16997010910
162	034	16997011110

KEY NO.		PART NO.
167	050	16997011770
164	007	16997011970
164	006	16997011981
164	005	16997011991
161	017	16997012300
161	018	16997012400
165	026	16997013020
166	025	16997017500
160	023	16997017600
160	024	16997017610
160	025	16997018011
162	040	16997020000
161	001	16997020031
161	002	16997020041
161	003	16997020051
161	010	16997020071
167	012	16997020630
162	041	16997021000
167	047	16997021881
165	038	16997021930
164	003	16997021950
165	019	16997021950
027	059	16997021960
167	045	16997021960
165	022	16997021980
165	021	16997021990
165	021	16997021991
160	015	16997022200
162	004	16997022501DG
162	020	16997022601DG
162	020	16997022602DG
162	021	16997022701DG
162	021	16997022702DG
162	024	16997022800
162	024	16997022810
162	034	16997022820
162	025	16997022900
162	025	16997022910
164	001	16997023100
164	002	16997023200
160	004	16997023900DG
165	003	16997024200DG
165	006	16997024300
165	007	16997024401
165	008	16997024500
165	009	16997024601
165	010	16997024700
166	015	16997024700
165	011	16997024801
165	011	16997024802

KEY NO.		PART NO.
165	015	16997025100DG
165	020	16997025200DG
166	004	16997025501
166	009	16997025600DG
166	010	16997025701DG
166	014	16997025800
166	016	16997025900
165	039	16997026800
167	022	16997027202
167	023	16997027302
167	024	16997027402
167	031	16997027602
160	030	16997027700
167	037	16997027700
167	051	16997027801DG
167	052	16997027901DG
167	021	16997028102
095	049	16997028201
166	030	16997028500
167	005	16997028600
162	023	16997028900
162	02301	16997028990
166	032	16997030010
166	033	16997030020
166	039	16997030040
160	027	16997032000
160	028	16997033400
160	02801	16997034100
160	02802	16997035100
162	030	16997301081
168	066	16998200021
168	053	16998200030
168	053	16998200030
168	098	16998200110
168	099	16998200120
168	021	16998201110
168	076	16998201771
167	053	16998201780
168	041	16998201780
168	078	16998201880
168	018	16998202101
168	018	16998202102
168	036	16998300060
168	035	16998300090
168	028	16998302701
168	028	16998302702
168	029	16998302805
168	030	16998302901
168	02901	16998303000
168	017	16998303600

KEY NO.		PART NO.
168	008	16998303700
146	011	16999030032
071	025	17405070130
091	009	17406204101BR
166	024	17407017400
165	030	17407019990
165	035	17407021660
165	035	17407021661
165	025	17407021910
165	012	17407024900
128	016	17407362300
167	005	17667028600
160	031	17677030030
075	002	17680070000
054	025	17683010040M
022	025	17686641110
162	020	17687022601DG
162	021	17687022701DG
165	036	17687025000
165	040	17687025300
168	053	17688200050
168	101	17688202100
168	102	17688202200
146	092	17689030080
146	019	17689100170
146	025	17689200050
038	027	17702844701DG
086	001	17705252001DG
085	080	17705254000
085	081	17705254100
085	082	17705254200
085	083	17705254300
085	085	17705254400
085	089	17705254500
085	086	17705254600
085	088	17705254700
086	002	17705256001DG
099	004	17706210021
167	010	17977026700
157	012	17979291990
025	001	17991112002
032	015	17991304510
065	004	17994360221
069	012	17994360221
064	034	17994420060
086	050	17994500591
069	001	17995010013M
069	008	17995010081M
069	011	17995010110
069	015	17995010150

KEY NO.		PART NO.
069	021	17995010210
069	022	17995010220
069	000	17995019100
070	001	17995020010M
070	002	17995020021M
070	003	17995020030
070	005	17995020200M
070	006	17995020200M
071	001	17995030010M
071	003	17995030030
071	004	17995030040
071	005	17995030050M
071	006	17995030060M
071	007	17995030070
071	015	17995031500
073	005	17995040011
073	012	17995040121
073	013	17995040130
073	018	17995040140
073	015	17995040150
073	016	17995040160
073	017	17995040170
073	011	17995041100
076	003	17995041200
073	014	17995041400
076	001	17995041500
075	003	17995050030
069	009	17995050090
075	001	17995050100
076	005	17995060050
076	011	17995060060
076	011	17995060061
076	012	17995060120
076	015	17995060150
076	016	17995060160
076	009	17995061300
076	018	17995061800
077	014	17995070140
077	015	17995070150
077	017	17995070170
077	018	17995070180
077	020	17995070200
077	021	17995070211
077	022	17995070220
077	024	17995070241
077	027	17995070270
128	027	17995070270
077	034	17995070340
077	080	17995070800
077	023	17995072300

KEY NO.		PART NO.
128	009	17995080091
128	015	17995080151
128	015	17995080152
128	017	17995080171
128	092	17995080201
128	089	17995080890
128	094	17995080931
128	096	17995080960
128	096	17995080961
128	097	17995080970M
082A	008	17995152330
084	099	17995220990
095	008	17995303802DG
095	008	17995303803DG
025	012	17997010601DG
100	069	17997013800
095	044	17997021770
025	008	17997026900DG
095	015	17997027101DG
146	087	19629040050
027	045	21306010180
100	068	34522812400
023	039	35602010150
025	055	35602010150
082	071	35602010150
166	022	35602010150
168	062	35602010150
168	067	35602010150
095	045	35605033020
099	005	35605033020
160	033	35605033020
023	038	35652030040
168	061	35652030040
027	016	36104400180
101	053	36142612400
050	017	36212110030
090	026	36252120070
061	018	36313530081
090	024	36401090020
050	022	36402200040
090	040	36423600080
059	021	36461020111
092	050	36502010060
027	008	36502200050
101	017	36502702140
105	011	36502702140
165	005	36522732400
025	006	36523102201
051	003	36531080070
025	036	36573112000

KEY NO.		PART NO.
057	004	36707030080
057	015	36707030080
090	038	36753302201DG
024	036	37371560090
024	036	37371560090
025	054	37371720090
106	010	37371720090
025	032	37481850030
168	037	37481850030
124	019	37614120021
168	085	37681850160
168	100	37681850160
102	043	62819200010
075	011	76500800100
051	027	79642010080
071	018	K2310040070
062	002	P1177012600
085	057	S0973063031
157	011	S2169908420
165	031	S7557010550
146	057	T0019010020
102	029	V1112604030
105	002	V1112604030
105	016	V1112604030
095	048	V1112605030
100	004	V1112606025
071	022	V1112606040
167	013	V1122604012
077	030	V1122605012
167	014	V1122605016
161	005	V1122605035
163	004	V1122605035
163	014	V1122605035
160	026	V1122606016
161	019	V1122606016
161	016	V1122606020
162	008	V1122608030
162	026	V1122608040
095	048	V1212605016
160	008	V1212606016
162	018	V1212606016
160	009	V1212606020
093	033	V1222606016
090	030	V1222606020
101	052	V1222606020
059	010	V1222608020
090	089	V1222608020
165	018	V1222806016
166	008	V1222806016
166	011	V1222806016

KEY NO.		PART NO.
165	037	V1902604008
168	103	V1902604008
085	059	V2003616070
039	012	V2004612100
157	006	V2004612100
065	010	V2004616040
082	062	V2012610025
090	049	V2013608016
026	010	V2013608025
030	006	V2013608025
030	004	V2013608030
037	036	V2013608035
092	048	V2013608035
061	008	V2013608045
037	019	V2013608050
073	006	V2013608050
083	030	V2013608085
077	026	V2013608110
085	063	V2013610030
024	007	V2013610065
069	004	V2013610070
055	005	V2013610120
055	006	V2013610130
090	072	V2013612025
094	017	V2013612025
039	025	V2013612030
039	013	V2013612035
039	004	V2013612040
065	023	V2013612040
157	007	V2013612040
031	005	V2013612045
039	027	V2013612045
039	002	V2013612080
085	019	V2013612170
063	013	V2013614035
085	066	V2013614035
039	005	V2013614040
039	014	V2013614040
085	024	V2013614040
085	026	V2013614040
039	028	V2013614045
039	006	V2013614050
058	001	V2013616030
084	010	V2013616035
085	002	V2013616035
094	003	V2013616035
066	048	V2014608025
094	008	V2014612075
094	019	V2014612075
065	020	V2014616050

KEY NO.		PART NO.
063	017	V2023610050
063	002	V2023612050
061	014	V2024610030
063	009	V2024612035
071	008	V2024612050
066	005	V2024614090
062	032	V2034612090
090	068	V2053606025
090	010	V2053606035
082A	014	V2053606050
064	011	V2113606010
128	012	V2113606012
102	020	V2113606012
105	014	V2113606012
105	009	V2113606016
102	018	V2113606020
082	006	V2113606035
082	014	V2113606035
082A	006	V2113606035
082	006	V2113606040
082A	006	V2113606040
108	012	V2123606012
168	057	V2123606012
160	014	V2123606020
024	012	V2123806012
024	012	V2123806012
095	014	V2123806016
095	016	V2123806016
095	047	V2123806016
077	031	V2173608012
022	018	V2173608016
022	021	V2173608016
026	008	V2173608016
027	031	V2173608016
032	017	V2173608016
037	014	V2173608016
050	016	V2173608016
056	017	V2173608016
057	017	V2173608016
059	026	V2173608016
063	033	V2173608016
070	004	V2173608016
071	014	V2173608016
075	008	V2173608016
082A	073	V2173608016
082A	076	V2173608016
090	009	V2173608016
099	013	V2173608016
106	008	V2173608016
106	055	V2173608016

KEY NO.		PART NO.
025	049	V2173608020
027	010	V2173608020
027	048	V2173608020
029	011	V2173608020
039	031	V2173608020
050	004	V2173608020
057	027	V2173608020
061	009	V2173608020
077	029	V2173608020
090	027	V2173608020
167	040	V2173608020
024	030	V2173608025
025	053	V2173608025
038	026	V2173608025
059	029	V2173608025
067	031	V2173608025
082	054	V2173608025
090	074	V2173608025
093	017	V2173608025
168	094	V2173608025
023	029	V2173608030
102	046	V2173608030
106	009	V2173608030
064	009	V2173608040
069	002	V2173608040
081	040	V2173608040
075	004	V2173608045
081	040	V2173608045
037	016	V2173608050
077	010	V2173608050
081	043	V2173608055
168	022	V2173608060
045	009	V2173610020
053	007	V2173610020
082	023	V2173610020
082A	023	V2173610020
054	016	V2173610025
054	026	V2173610025
055	025	V2173610025
056	009	V2173610025
055	003	V2173610030
055	009	V2173610030
082A	040	V2173610030
069	005	V2173610035
055	004	V2173610060
069	019	V2173610065
167	004	V2173612030
038	028	V2183608016
043	007	V2183608016
057	018	V2183608016

KEY NO.		PART NO.
085	069	V2183608016
091	006	V2183608016
092	033	V2183608016
092	037	V2183608016
093	024	V2183608016
106	020	V2183608016
106	022	V2183608016
023	021	V2183608020
025	002	V2183608020
038	002	V2183608020
063	021	V2183608020
090	036	V2183608020
090	046	V2183608020
090	076	V2183608020
091	032	V2183608020
092	047	V2183608020
095	006	V2183608020
095	009	V2183608020
095	012	V2183608020
095	033	V2183608020
100	058	V2183608020
164	028	V2183608020
168	020	V2183608020
023	030	V2183608025
025	034	V2183608025
045	011	V2183608025
063	021	V2183608025
090	041	V2183608025
168	071	V2183608025
106	041	V2183608030
166	023	V2183608030
100	070	V2183608035
168	024	V2183608040
168	054	V2183608055
045	012	V2183608065
024	014	V2183610025
062	016	V2183610025
081	008	V2183610025
094	007	V2183612025
024	013	V2183808025
024	026	V2183808025
022	024	V2193606016
022	032	V2193606016
090	034	V2193606016
091	036	V2193606016
092	026	V2193606016
093	033	V2193606016
102	044	V2193606016
090	065	V2193606020
164	022	V2193606020

KEY NO.		PART NO.
023	028	V2193606025
090	068	V2193606025
164	012	V2193606025
102	006	V2313605012
091	016	V2323606016
102	015	V2323606016
061	010	V2512608025
031	011	V2513408020
050	025	V2513408020
062	017	V2513410020
031	016	V2513412035
043	003	V2513412035
031	017	V2513412045
043	002	V2513414035
043	009	V2513416035
084	012	V2513416035
094	025	V2513416035
031	015	V2514410025
102	031	V3002600040
105	004	V3002600040
105	018	V3002600040
024	038	V3002600060
024	038	V3002600060
026	016	V3002600060
053	009	V3002600060
090	012	V3002600060
099	006	V3002600060
162	015	V3002600060
164	014	V3002600060
166	007	V3012600040
157	003	V3022600120
026	012	V3042600080
027	043	V3042600080
027	056	V3042600080
030	005	V3042600080
030	007	V3042600080
030	013	V3042600080
038	003	V3042600080
037	037	V3042600080
050	005	V3042600080
050	023	V3042600080
053	004	V3042600080
056	022	V3042600080
064	010	V3042600080
066	049	V3042600080
092	049	V3042600080
095	024	V3042600080
095	046	V3042600080
099	010	V3042600080
164	031	V3042600080

KEY NO.		PART NO.
024	010	V3042600100
071	024	V3042600100
090	025	V3042600100
090	062	V3042600120
061	011	V3043600080
073	007	V3043600080
076	019	V3043600080
162	010	V3043600080
162	029	V3043600080
029	014	V3043600100
062	019	V3043600100
077	013	V3043600100
128	026	V3043600100
085	064	V3043600100
039	003	V3043600120
039	016	V3043600120
085	020	V3043600120
094	020	V3043600120
157	009	V3043600120
039	015	V3043600140
157	015	V3043600140
157	015	V3043600140
058	003	V3043600160
084	013	V3043600160
085	067	V3043600160
094	026	V3043600160
091	012	V3052600080
100	067	V3052600080
065	021	V3052600160
085	091	V3202600180
085	091	V3212600180
027	019	V3232600100
059	004	V3232600100
067	037	V3232600140
037	040	V3342600100
045	041	V3342600100
050	027	V3342600100
053	021	V3342600100
168	015	V3343600100
168	095	V3343600100
031	004	V3343600120
067	066	V3343600160
162	038	V3402700060
162	033	V3402700080
091	018	V3501100060
090	050	V3802600080
160	032	V3802600080
164	023	V3802600080
102	030	V4011600040
105	003	V4011600040

KEY NO.		PART NO.
105	017	V4011600040
166	006	V4011600040
024	037	V4011600060
024	037	V4011600060
026	017	V4011600060
053	019	V4011600060
071	023	V4011600060
082A	015	V4011600060
162	014	V4011600060
038	004	V4011600080
038	008	V4011600080
050	006	V4011600080
050	024	V4011600080
061	012	V4011600080
077	032	V4011600080
083	031	V4011600080
128	098	V4011600080
128	098	V4011600080
099	011	V4011600080
162	009	V4011600080
162	028	V4011600080
164	030	V4011600080
024	008	V4011600100
029	015	V4011600100
054	003	V4011600100
055	007	V4011600100
062	018	V4011600100
063	018	V4011600100
069	003	V4011600100
077	016	V4011600100
082	061	V4011600100
128	024	V4011600100
168	033	V4011600100
168	052	V4011600100
031	007	V4011600120
039	007	V4011600120
039	017	V4011600120
039	026	V4011600120
062	033	V4011600120
063	004	V4011600120
065	024	V4011600120
071	009	V4011600120
085	021	V4011600120
090	061	V4011600120
090	073	V4011600120
094	009	V4011600120
094	018	V4011600120
157	008	V4011600120
039	008	V4011600140
039	018	V4011600140

KEY NO.		PART NO.
063	014	V4011600140
066	006	V4011600140
085	027	V4011600140
085	065	V4011600140
157	014	V4011600140
157	014	V4011600140
058	002	V4011600160
065	011	V4011600160
084	011	V4011600160
085	003	V4011600160
085	061	V4011600160
094	004	V4011600160
085	090	V4011600180
085	097	V4011600180
092	061	V4111600040
102	032	V4111600040
105	005	V4111600040
105	019	V4111600040
166	005	V4111600040
024	039	V4111600060
024	039	V4111600060
027	005	V4111600060
027	028	V4111600060
030	018	V4111600060
053	020	V4111600060
086	071	V4111600060
090	011	V4111600060
164	013	V4111600060
026	011	V4111600080
027	012	V4111600080
027	044	V4111600080
030	009	V4111600080
030	029	V4111600080
038	005	V4111600080
038	009	V4111600080
038	024	V4111600080
056	019	V4111600080
057	010	V4111600080
057	041	V4111600080
090	048	V4111600080
162	027	V4111600080
164	029	V4111600080
024	009	V4111600100
027	017	V4111600100
027	025	V4111600100
037	041	V4111600100
045	042	V4111600100
050	028	V4111600100
053	022	V4111600100
059	006	V4111600100

KEY NO.		PART NO.
077	007	V4111600100
090	014	V4111600100
168	051	V4111600100
168	093	V4111600100
090	060	V4111600120
094	024	V4111600120
067	045	V4111600140
157	013	V4111600140
168	050	V4111600140
168	096	V4111600140
077	005	V4111600160
128	005	V4111600160
086	005	V4111600160
086	017	V4111600160
090	007	V4111600160
085	087	V4111600180
057	006	V4111600200
027	006	V5001920020
027	026	V5001920020
027	029	V5001920020
029	009	V5001920020
030	017	V5001920020
038	025	V5001920020
056	020	V5001920020
059	005	V5001920020
093	036	V5001920020
086	072	V5001925015
027	020	V5001925020
030	010	V5001925020
030	030	V5001925020
052	011	V5001925020
057	011	V5001925020
057	042	V5001925020
090	052	V5001925020
090	015	V5001925025
052	010	V5001930025
056	013	V5001930025
067	038	V5001932030
090	008	V5001940025
085	092	V5001940035
038	014	V5111006036
057	002	V5111008050
037	026	V5201006016
045	020	V5201006016
062	031	V5201010020
031	013	V5201010022
039	009	V5201010022
043	004	V5201010022
066	004	V5201012020
063	015	V5502040093

KEY NO.		PART NO.
092	060	V5502040093
086	006	V5601600016
086	018	V5601600016
027	036	V5801403016
038	021	V5801403016
064	032	V5801403025
076	013	V5801404018
057	020	V5801404025
064	029	V5801405025
037	004	V5801406025
050	010	V5801406025
055	022	V5801406025
057	023	V5801406025
037	030	V5901010070
045	022	V5901010070
055	027	V5901010100
037	005	V5901010150
037	029	V5901010180
030	021	V5901012150
034	005	V6001106004
036	005	V6001106005
047	002	V6001106005
066	041	V6001106012
066	016	V6001106014
036	013	V6001106205
044	027	V6001106205
032	020	V6001106207
044	010	V6001106207
066	008	V6001106207
067	019	V6001106210
055	018	V6001106211
064	065	V6001106211
054	017	V6001106212
064	033	V6001106212
044	028	V6001106304
033	004	V6001106305
034	004	V6001106305
034	008	V6001106305
036	003	V6001106305
034	009	V6001106306
066	019	V6001106308
054	031	V6001106309
032	027	V6001106909
168	012	V6001506202
033	005	V6001606307
047	003	V6031106204
032	013	V6041106206
032	021	V6041106206
032	008	V6041106207
066	003	V6041106208

KEY NO.		PART NO.
067	018	V6041106208
051	026	V6041106306
051	002	V6041606305
051	025	V6041606305
061	004	V6061105205
055	017	V6261100210
044	002	V6544303517
033	032	V6544303524
034	011	V6544323717
034	017	V6544323717
033	011	V6544323723
033	018	V6544323723
033	024	V6544323723
051	009	V6544404527
044	016	V6544455017
044	022	V6544455017
038	012	V6802000010
037	007	V6802000010
045	007	V6802000010
050	003	V6802000010
052	007	V6802000010
056	003	V6802000019
038	018	V7041400140
038	031	V7041400140
168	049	V7041400150
050	018	V7041400160
057	007	V7041400200
047	004	V7041400250
052	025	V7041400250
057	031	V7041400250
064	002	V7041400250
061	005	V7041400250
032	014	V7041400300
044	008	V7041400300
032	009	V7041400350
032	022	V7041400350
033	007	V7041400350
044	013	V7041400400
054	033	V7041400450
056	008	V7041400450
070	009	V7041400480
033	021	V7041400500
033	029	V7041400500
034	015	V7041400500
067	015	V7041400500
066	042	V7041400600
037	024	V7051400320
045	017	V7051400320
168	011	V7051400350
047	012	V7051400470

KEY NO.		PART NO.
029	016	V7051400620
039	021	V7051400620
064	043	V7051400620
039	022	V7051400720
051	022	V7051400720
066	030	V7051400800
066	046	V7051400900
036	020	V7051400950
066	040	V7051400950
055	008	V7051401000
056	010	V7051401000
073	010	V7081400060
076	007	V7081400060
037	012	V7081400070
160	010	V7081400070
076	020	V7081400080
077	006	V7081400080
162	022	V7081400080
027	047	V7081400090
076	010	V7081400090
077	004	V7081400120
077	019	V7081400120
128	004	V7081400120
023	018	V7201019008
082	063	V7201019008
076	002	V7201019009
052	002	V7201024010
075	010	V7201024011
050	008	V7201024014
025	047	V7201024016
055	021	V7201024016
076	004	V7201024016
052	022	V7201024021
064	006	V7201035038
065	012	V7201035040
064	007	V7201035041
083	027	V7201119009
039	023	V7201124014
071	002	V7201124014
082	030	V7201124014
082A	030	V7201124014
083	029	V7201124014
071	020	V7201124016
081	038	V7201124020
082	005	V7201124020
082	030	V7201124020
082A	005	V7201124020
082A	030	V7201124020
083	028	V7201124020
071	019	V7201124022

KEY NO.		PART NO.
081	044	V7201124022
082A	072	V7211031030
082A	075	V7211031030
082	021	V7211031035
082A	021	V7211031035
081	007	V7211031045
082	022	V7211031045
082A	022	V7211031045
065	019	V7211031055
025	042	V7211031065
065	027	V7211031075
065	013	V7211031080
082	060	V7211031140
069	010	V7212031055
061	007	V7231020080
061	006	V7231020085
066	036	V7231020110
066	020	V7231020115
038	015	V7441142508
047	005	V7441254708
064	018	V7441256210
086	015	V7601500000
030	022	V7631500000
057	028	V7631500000
065	026	V7631500000
030	023	V7641500000
069	018	V7801000004
066	043	V7811600006
075	009	V7811600006
039	010	V7811600008
065	003	V7811600008
124	005	V9201508010
124	006	V9201512014
124	007	V9201513017
124	008	V9201519022
124	009	V9201524027
124	003	V9361500150
124	015	V9411506100
124	014	V9451506100
157	002	W2002612080

KEY NO.		PART NO.

KEY NO.		PART NO.